Apple® II

Apple IIe Technical Reference Manual



INCLUDES ROM LISTINGS

DOWNLOADED FROM WWW.APPLE2ONLINE.COM

> $24.95 FPT
USA

Apple® Technical Library Titles for the Apple IIe and IIc

The Official Publications from Apple Computer, Inc.

Apple IIe and Apple IIc programmers, developers, and enthusiasts will find a wealth of information in the Apple Technical Library, an ongoing series of comprehensive reference manuals. The first volumes in the Library contained detailed information about the Apple IIe and Apple IIc computers. They describe the hardware, firmware, the ProDOS 8 operating system, and the Applesoft BASIC programming language found in Apple IIe and IIc computers.

These books, written and produced by Apple Computer, Inc., provide definitive references for those interested in getting the most out of their Apple IIe or IIc.

Apple Technical Library Titles for the Apple IIe and IIc include:

- Apple IIe Technical Reference
- Apple IIc Technical Reference
- Applesoft Tutorial
- Applesoft BASIC Programmer's Reference Manual
- ProDOS 8 Technical Reference
- BASIC Programming with ProDOS
- Apple Numerics Manual
- ImageWriter II Technical Reference Manual







Apple® II

Apple IIe Technical Reference

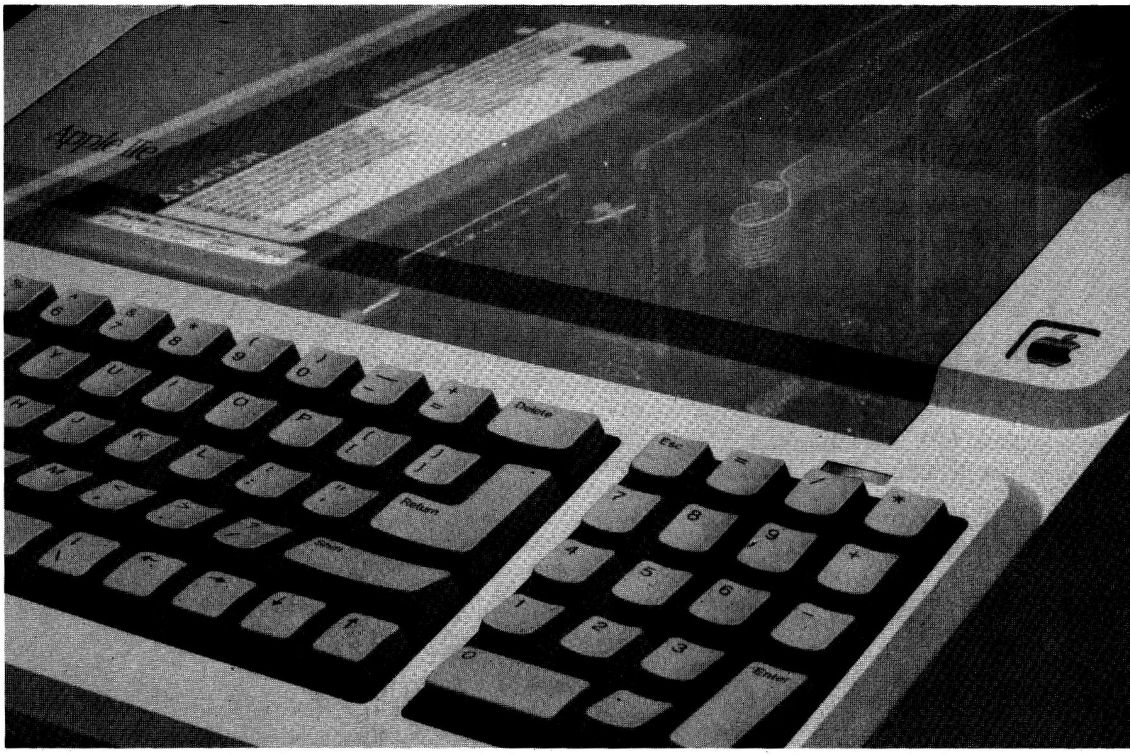

Addison-Wesley Publishing Company, Inc.
Reading, Massachusetts Menlo Park, California Don Mills, Ontario
Wokingham, England Amsterdam Bonn Sydney Singapore Tokyo
Madrid Bogotá Santiago San Juan

APPLE COMPUTER, INC.

Copyright © 1986 by Apple Computer, Inc.

All rights reserved. No part of this publication may be reproduced, stored in a retrieval system, or transmitted, in any form or by any means, electronic, mechanical, photocopying, recording, or otherwise, without prior written permission of Apple Computer, Inc. Printed in the United States of America.

Apple, the Apple logo, Disk II, LaserWriter, and ProDOS are registered trademarks of Apple Computer, Inc.

ProFile and Macintosh are trademarks of Apple Computer, Inc.

CP/M is a registered trademark of Digital Research, Inc.

ITC Garamond, ITC Avant Garde Gothic, and ITC Zapf Dingbats are registered trademarks of International Typeface Corporation.

POSTSCRIPT is a trademark of Adobe Systems Incorporated.

SOFTCARD and Microsoft are registered trademarks of Microsoft Corporation.

Z80 is a registered trademark of Zilog, Inc.

Z-Engine is a trademark of Advanced Logic Systems, Inc.

Simultaneously published in the United States and Canada.

ISBN 0-201-17750-1
ABCDEFGHIJ-DO-8987
First printing, January 1987

WARRANTY INFORMATION

ALL IMPLIED WARRANTIES ON THIS MANUAL, INCLUDING IMPLIED WARRANTIES OF MERCHANTABILITY AND FITNESS FOR A PARTICULAR PURPOSE, ARE LIMITED IN DURATION TO NINETY (90) DAYS FROM THE DATE OF THE ORIGINAL RETAIL PURCHASE OF THIS PRODUCT.

Even though Apple has reviewed this manual, **APPLE MAKES NO WARRANTY OR REPRESENTATION, EITHER EXPRESS OR IMPLIED, WITH RESPECT TO THIS MANUAL, ITS QUALITY, ACCURACY, MERCHANTABILITY, OR FITNESS FOR A PARTICULAR PURPOSE. AS A RESULT, THIS MANUAL IS SOLD "AS IS," AND YOU, THE PURCHASER, ARE ASSUMING THE ENTIRE RISK AS TO ITS QUALITY AND ACCURACY.**

IN NO EVENT WILL APPLE BE LIABLE FOR DIRECT, INDIRECT, SPECIAL, INCIDENTAL, OR CONSEQUENTIAL DAMAGES RESULTING FROM ANY DEFECT OR INACCURACY IN THIS MANUAL, even if advised of the possibility of such damages.

THE WARRANTY AND REMEDIES SET FORTH ABOVE ARE EXCLUSIVE AND IN LIEU OF ALL OTHERS, ORAL OR WRITTEN, EXPRESS OR IMPLIED. No Apple dealer, agent, or employee is authorized to make any modification, extension, or addition to this warranty.

Some states do no allow the exclusion or limitation of implied warranties or liability for incidental or consequential damages, so the above limitation or exclusion may not apply to you. This warranty gives you specific legal rights, and you may also have other rights which vary from state to state.

Downloaded from www.Apple2Online.com

Contents

Figures and tables xi

Preface About This Manual xvii

Contents of this manual xvii
The Apple IIe family xix
    Identifying your Apple IIe xix
The original Apple IIe xx
The enhanced Apple IIe xx
    Startup drives xx
    Video firmware xxi
    Video enhancements xxi
    Applesoft 80-column support xxi
    Applesoft lowercase support xxii
    Apple II Pascal xxii
    System Monitor enhancements xxii
    Interrupt handling xxii
The extended keyboard Apple IIe xxiii
    RAM upgrade xxiii
    Single-wire Shift-key mod xxiii
Symbols used in this manual xxiv

Chapter 1 Introduction 1

Removing the cover 2
The keyboard 3
The speaker 4
The power supply 4
The circuit board 4
Connectors on the circuit board 7
Connectors on the back panel 8

Chapter 2 Built-in I/O Devices 9

The keyboard 10
Reading the keyboard 12
The video display generator 16
Text modes 19
Text character sets 19
40-column versus 80-column text 21
Graphics modes 21
Low-resolution graphics 21
High-resolution graphics 23
Double high-resolution graphics 25
Video display pages 27
Display mode switching 28
Addressing display pages directly 31
Secondary inputs and outputs 38
The speaker 38
Cassette input and output 39
The hand control connector signals 40
Annunciator outputs 40
Strobe output 41
Switch inputs 41
Analog inputs 42
Summary of secondary I/O locations 43

Chapter 3 Built-in I/O Firmware 45

Using the I/O subroutines 48
Apple II compatibility 48
The 80-column firmware 49
The old monitor 51
The standard I/O links 51
Standard output features 52
COUT output subroutine 52
Control characters with COUT1 and BASICOUT 53
The stop-list feature 55
The text window 56
Inverse and flashing text 57
Standard input features 58
RDKEY input subroutine 59
KEYIN input subroutine 59
Escape codes with KEYIN and BASICIN 60
Cursor motion in escape mode 60
GETLN input subroutine 62

Editing with GETLN 63
Cancel line 63
Backspace 63
Retype 64
Monitor firmware support 64
I/O firmware support 68

Chapter 4 Memory Organization 73

Main memory map 74
RAM memory allocation 76
Reserved memory pages 77
Page zero 77
The 65C02 stack 78
The input buffer 78
Link-address storage 78
The display buffers 78
Bank-switched memory 82
Setting bank switches 83
Reading bank switches 86
Auxiliary memory and firmware 86
Memory mode switching 88
Auxiliary-memory subroutines 91
Moving data to auxiliary memory 92
Transferring control to auxiliary memory 93
The reset routine 94
The cold-start procedure 95
The warm-start procedure 95
Forced cold start 96
The reset vector 96
Automatic self-test 98

Chapter 5 Using the Monitor 99

Invoking the Monitor 100
Syntax of Monitor commands 101
Monitor memory commands 102
Examining memory contents 102
Memory dump 102
Changing memory contents 105
Changing one byte 105
Changing consecutive locations 106
ASCII input mode 106
Moving data in memory 107
Comparing data in memory 109
Searching for bytes in memory 110
Examining and changing registers 110

Monitor cassette tape commands 111
Saving data on tape 111
Reading data from tape 113
Miscellaneous Monitor commands 114
Inverse and normal display 114
Back to BASIC 115
Redirecting input and output 115
Hexadecimal arithmetic 116
Special tricks with the Monitor 116
Multiple commands 116
Filling memory 117
Repeating commands 118
Creating your own commands 119
Machine-language programs 120
Running a program 120
Disassembled programs 121
The Mini-Assembler 123
Starting the Mini-Assembler 123
Restrictions 123
Using the Mini-Assembler 124
Mini-Assembler instruction formats 126
Summary of Monitor commands 127
Examining memory 127
Changing the contents of memory 127
Moving and comparing 127
The Examine command 127
The Search command 128
Cassette tape commands 128
Miscellaneous Monitor commands 128
Running and listing programs 129
The Mini-Assembler 129

Chapter 6 Programming for Peripheral Cards 131

Peripheral-card memory spaces 132
Peripheral-card I/O space 133
Peripheral-card ROM space 133
Expansion ROM space 133
Peripheral-card RAM space 136
I/O programming suggestions 136
Finding the slot number with ROM switched in 137
I/O addressing 138
RAM addressing 139
Changing the standard I/O links 140
Other uses of I/O memory space 141
Switching I/O memory 142
Developing cards for slot 3 144

Pascal 1.1 firmware protocol 145
Device identification 145
I/O routine entry points 145
Interrupts on the enhanced Apple IIe 147
What is an interrupt? 147
Interrupts on Apple IIe series computers 148
Rules of the interrupt handler 149
Interrupt handling on the 65C02 and 6502 150
The interrupt vector at $FFFE 151
The built-in interrupt handler 151
Saving the Apple IIe's memory configuration 152
Managing main and auxiliary stacks 153
The user's interrupt handler at $3FE 154
Handling break instructions 155
Interrupt differences: Apple IIe versus Apple IIc 156

Chapter 7 Hardware Implementation 157

Environmental specifications 158
The power supply 159
The power connector 160
The 65C02 microprocessor 161
65C02 timing 162
The custom integrated circuits 164
The Memory Management Unit 164
The Input/Output Unit 165
The PAL device 167
Memory addressing 168
ROM addressing 168
RAM addressing 169
Dynamic-RAM refreshment 170
Dynamic-RAM timing 171
The video display 173
The video counters 173
Display memory addressing 174
Display address mapping 175
Video display modes 178
Text displays 178
Low-resolution display 181
High-resolution display 183
Double high-resolution display 184
Video output signals 185
Built-in I/O circuits 186
The keyboard 187
Connecting a keypad 188
Cassette I/O 188
The speaker 189
Game I/O signals 189

Expanding the Apple IIe 191
The expansion slots 191
The peripheral address bus 192
The peripheral data bus 192
Loading and driving rules 193
Interrupt and DMA daisy chains 193
The auxiliary slot 197
80-column display signals 197

Appendix A The 65C02 Microprocessor 209

Differences between 6502 and 65C02 209
Different cycle times 210
Different instruction results 210
Data sheet 210

Appendix B Directory of Built-in Subroutines 220

Appendix C Apple II Family Differences 227

Keyboard 227
Apple keys 228
Character sets 228
80-column display 228
Escape codes and control characters 229
Built-in Language Card 229
Auxiliary memory 229
Auxiliary slot 229
Back panel and connectors 230
Soft switches 230
Built-in self-test 230
Forced reset 230
Interrupt handling 231
Vertical sync for animators 231
Signature byte 231
Hardware implementation 231

Appendix D Operating Systems and Languages 233

Operating systems 233
ProDOS 233
DOS 3.3 233
Pascal operating system 234
CP/M 234

Languages 234
Assembly language 234
Applesoft BASIC 235
Integer BASIC 235
Pascal language 235
Fortran 235

Appendix E Conversion Tables 236

Bits and bytes 236
Hexadecimal and decimal 238
Hexadecimal and negative decimal 239
Graphics bits and pieces 241
Eight-bit code conversions 243

Appendix F Frequently Used Tables 252

Appendix G Using an 80-Column Text Card 267

Starting up with Pascal or CP/M 267
Starting up with ProDOS or DOS 3.3 268
Using the GET command 269
When to switch modes versus when to deactivate 269
Display features with the text card 270
INVERSE, FLASH, NORMAL, HOME 270
Tabbing with the original Apple IIe 271
Comma tabbing with the original Apple IIe 271
HTAB and POKE 1403 271
Using control characters with the card 272
Control characters and their functions 272
How to use control-character codes in programs 275
A word of caution to Pascal programmers 275

Appendix H Programming With the Super Serial Card 276

Locating the card 276
Operating modes 277
Operating commands 277
The command character 278
Baud rate, nB 279
Data format, nD 279
Parity, nP 279
Set time delay, nC, nL, and nF 280
Echo characters to the screen, E_E/D 280

Automatic carriage return, C 281
Automatic line feed, L_E/D 281
Mask line feed in, M_E/D 281
Reset card, R 281
Specify screen slot, S 282
Translate lowercase characters, nT 282
Suppress control characters, Z 283
Find keyboard, F_E/D 283
XOFF recognition, X_E/D 283
Tab in BASIC, T_E/D 284
Terminal mode 284
Entering terminal mode, T 284
Transmitting a break, B 284
Special characters, S_E/D 285
Quitting terminal mode, Q 285
SSC error codes 285
The ACIA 286
SSC firmware memory use 287
Zero-page locations 288
Peripheral-card I/O space 288
Scratchpad RAM locations 290

Appendix I International Versions 292

The English keyboard 297
The French keyboard 298
The Canadian keyboard 299
The German keyboard 300
The Italian keyboard 301
The Western Spanish keyboard 302
The Swedish keyboard 303
Certification 304
Product safety 304
Grounding notice 304
Power supply specifications 305

Appendix J Monitor Firmware Listing 306

Glossary 349

Bibliography 373

Index 375

Tell Apple Card

Figures and tables

Chapter 1 Introduction 1

Figure 1-1 Removing the cover 1
Figure 1-2 Apple IIe with the cover off 1
Figure 1-3 Original and enhanced IIe keyboard 3
Figure 1-4 Extended keyboard IIe keyboard 3
Figure 1-5 Circuit board 5
Figure 1-6 Expansion slots 7
Figure 1-7 Auxiliary slot 7
Figure 1-8 Back panel connectors 8

Chapter 2 Built-in I/O Devices 9

Figure 2-1 Original and enhanced IIe keyboard 11
Figure 2-2 Extended keyboard IIe keyboard 11
Figure 2-3 40-column text display 22
Figure 2-4 80-column text display 22
Figure 2-5 High-resolution display bits 23
Figure 2-6 Map of 40-column text display 33
Figure 2-7 Map of 80-column text display 34
Figure 2-8 Map of low-resolution graphics display 35
Figure 2-9 Map of high-resolution graphics display 36
Figure 2-10 Map of double high-resolution graphics display 37
Table 2-1 Keyboard memory locations 12
Table 2-2 Keys and ASCII codes 14
Table 2-3 Video display specifications 17
Table 2-4 Display character sets 20
Table 2-5 Low-resolution graphics colors 23
Table 2-6 High-resolution graphics colors 25
Table 2-7 Double high-resolution graphics colors 26
Table 2-8 Video display page locations 28
Table 2-9 Display soft switches 29
Table 2-10 Annunciator memory locations 41
Table 2-11 Secondary I/O memory location 43

Chapter 3 Built-in I/O Firmware 45

Table 3-1 Monitor firmware routines 46
Table 3-2 Apple II mode 48
Table 3-3a Control characters, 80-column firmware off 53
Table 3-3b Control characters, 80-column firmware on 53

Table 3-4 Text window memory locations 57
Table 3-5 Text format control values 57
Table 3-6 Escape codes 60
Table 3-7 Prompt characters 62
Table 3-8 Video firmware routines 64
Table 3-9 Slot 3 firmware protocol table 69
Table 3-10 Pascal video control functions 70

Chapter 4 Memory Organization 73

Figure 4-1 System memory map 75
Figure 4-2 RAM allocation map 76
Figure 4-3 Bank-switched memory map 82
Figure 4-4 Memory map with auxiliary memory 87
Table 4-1 Monitor zero-page use 79
Table 4-2 Applesoft zero-page use 80
Table 4-3 Integer BASIC zero-page use 80
Table 4-4 DOS 3.3 zero-page use 81
Table 4-5 ProDOS MLI and disk-driver zero-page use 81
Table 4-6 Bank select switches 84
Table 4-7 Auxiliary-memory select switches 90
Table 4-8 48K RAM transfer routines 91
Table 4-9 Parameters for AUXMOVE routine 92
Table 4-10 Parameters for XFER routine 93
Table 4-11 Page 3 vectors 97

Chapter 5 Using the Monitor 99

Table 5-1 Mini-Assembler address formats 126

Chapter 6 Programming for Peripheral Cards 131

Figure 6-1 Expansion ROM enable circuit 134
Figure 6-2 ROM disable address decoding 135
Figure 6-3 I/O memory map 142
Table 6-1 Peripheral-card I/O memory locations enabled by DEVICE SELECT' 133
Table 6-2 Peripheral-card ROM memory locations enabled by I/O SELECT' 133
Table 6-3 Peripheral-card RAM memory locations 136
Table 6-4 Peripheral-card I/O base addresses 138
Table 6-5 I/O memory switches 143
Table 6-6 Peripheral-card device-class assignments 145
Table 6-7 I/O routine offsets and registers under Pascal 1.1 protocol 146
Table 6-8 Interrupt-handling sequence 152
Table 6-9 BRK handler information 155
Table 6-10 Memory configuration information 156

Chapter 7 Hardware Implementation 157

Figure 7-1 65C02 timing signals 163
Figure 7-2 MMU pinouts 165
Figure 7-3 IOU pinouts 166
Figure 7-4 PAL pinouts 167
Figure 7-5 2364 ROM pinouts 168
Figure 7-6 23128 ROM pinouts 169
Figure 7-7 2316 ROM pinouts 169
Figure 7-8 2333 ROM pinouts 170
Figure 7-9 64Kx1 RAM pinouts 170
Figure 7-10 64Kx4 RAM pinouts 170
Figure 7-11 RAM timing signals 172
Figure 7-12 40-column text display memory 177
Figure 7-13a 7 MHz video timing signals 180
Figure 7-13b 14 MHz video timing signals 181
Figure 7-14 Peripheral-signal timing 194
Figure 7-15 Original and enhanced IIe schematic diagram 201
Figure 7-16 Extended keyboard IIe schematic diagram 205
Table 7-1 Summary of environmental specifications 158
Table 7-2 Power supply specifications 159
Table 7-3 Power connector signal specifications 160
Table 7-4 65C02 microprocessor specifications 161
Table 7-5 65C02 timing signal descriptions 163
Table 7-6 MMU signal descriptions 165
Table 7-7 IOU signal descriptions 166
Table 7-8 PAL signal descriptions 167
Table 7-9 RAM address multiplexing 171
Table 7-10 RAM timing signal descriptions 172
Table 7-11 Display address transformation 177
Table 7-12 Display memory addressing 177
Table 7-13 Memory address bits for display modes 178
Table 7-14 Character-generator control signals 181
Table 7-15 Internal video connector signals 186
Table 7-16 Keyboard connector signals 187
Table 7-17 Keypad connector signals 188
Table 7-18 Speaker connector signals 189
Table 7-19 Game I/O connector signals 190
Table 7-20 Expansion slot signals 194
Table 7-21 Auxiliary slot signals 198

Appendix A **The 65C02 Microprocessor 209**

Table A-1 Cycle time differences 210

Appendix E **Conversion Tables 236**

Figure E-1 Bits, nibbles, and bytes 237
Figure E-2 Bit ordering in graphic displays 241
Table E-1 What a bit can represent 236
Table E-2 Values represented by a nibble 237
Table E-3 Hexadecimal/decimal conversion 238
Table E-4 Hexadecimal to negative decimal conversion 240
Table E-5 Hexadecimal values for high-resolution dot patterns 241
Table E-6 Control characters, high bit off 244
Table E-7 Special characters, high bit off 245
Table E-8 Uppercase characters, high bit off 246
Table E-9 Lowercase characters, high bit off 247
Table E-10 Control characters, high bit on 248
Table E-11 Special characters, high bit on 249
Table E-12 Uppercase characters, high bit on 250
Table E-13 Lowercase characters, high bit on 251

Appendix F **Frequently Used Tables 252**

Table F-1 Keys and ASCII codes 252
Table F-2 Keyboard memory locations 254
Table F-3 Video display specifications 254
Table F-4 Double high-resolution graphics colors 255
Table F-5 Video display page locations 255
Table F-6 Display soft switches 256
Table F-7 Monitor firmware routines 257
Table F-8a Control characters, 80-column firmware off 259
Table F-8b Control characters, 80-column firmware on 260
Table F-9 Text format control values 261
Table F-10 Escape codes 261
Table F-11 Pascal video control functions 263
Table F-12 Bank select switches 264
Table F-13 Auxiliary-memory select switches 265
Table F-14 48K RAM transfer routines 265
Table F-15 I/O memory switches 266
Table F-16 I/O routine offsets and registers under Pascal 1.1 protocol 266

Appendix G **Using an 80-Column Text Card 267**

Table G-1 Control characters, 80-column firmware on 273

Appendix H Programming With the Super Serial Card 276

Table H-1 Baud rate selections 279
Table H-2 Data format selections 279
Table H-3 Parity selections 279
Table H-4 Time delay selections 280
Table H-5 Lowercase character display options 282
Table H-6 STSBYTE bit definitions 285
Table H-7 Error codes and bits 286
Table H-8 Memory use map 287
Table H-9 Zero-page locations used by the SSC 288
Table H-10 Address register bits interpretation 288
Table H-11 Scratchpad RAM locations used by the SSC 290

Appendix I International Versions 292

Figure I-1 International IIe schematic diagram 293
Figure I-2 English keyboard 297
Figure I-3 French keyboard 298
Figure I-4 Canadian keyboard 299
Figure I-5 German keyboard 300
Figure I-6 Italian keyboard 301
Figure I-7 Western Spanish keyboard 302
Figure I-8 Swedish keyboard 303
Table I-1 English keyboard ASCII codes 297
Table I-2 French keyboard ASCII codes 298
Table I-3 Canadian keyboard ASCII codes 299
Table I-4 German keyboard ASCII codes 300
Table I-5 Italian keyboard ASCII codes 301
Table I-6 Western Spanish keyboard ASCII codes 302
Table I-7 Swedish keyboard ASCII codes 303
Table I-8 International power supply specifications 305

Preface

About This Manual

This is the reference manual for the Apple® IIe personal computer. It contains detailed descriptions of all of the hardware and firmware that make up the Apple IIe and provides the technical information that peripheral-card designers and programmers need.

This manual contains a lot of information about the way the Apple IIe works, but it doesn't tell you how to use the Apple IIe. For this, you should read the other Apple IIe manuals, especially the following:

- *Apple IIe Owner's Guide*
- *Applesoft Tutorial*

This manual is designed to answer the question "What's inside the box?" It describes the internal operation of the Apple IIe as completely as possible in a single volume.

Contents of this manual

The material in this manual is presented roughly in order of increasing intimacy with the hardware; the farther you go in the manual, the more technical the material becomes. The main subject areas are

- introduction: preface and Chapter 1
- use of built-in features: Chapters 2 and 3
- how the memory is organized: Chapter 4
- information for programmers: Chapters 5 and 6
- hardware implementation: Chapter 7
- additional information: appendixes, glossary, and bibliography

Chapter 1 identifies the main parts of the Apple IIe and tells where in the manual each part is described.

Chapters 2 and 3 describe the built-in input and output features of the Apple IIe. This part of the manual includes information you need for low-level programming on the Apple IIe. Chapter 2 describes the built-in I/O features, and Chapter 3 tells you how to use the firmware that supports them.

Chapter 4 describes the way the Apple IIe's memory space is organized, including the allocation of programmable memory for the video display buffers.

Chapter 5 is a user manual for the Monitor that is included in the built-in firmware. The Monitor is a system program that you can use for program debugging at the machine level.

Chapter 6 describes the programmable features of the peripheral-card connectors and gives guidelines for their use. It also describes interrupt programming on the Apple IIe.

Chapter 7 is a description of the hardware that implements the features described in the earlier chapters. This information is included primarily for programmers and peripheral-card designers, but it will also help you if you just want to understand more about the way the Apple IIe works.

Additional reference information appears in the appendixes:

Appendix A is the manufacturer's description of the Apple IIe's microprocessor.

Appendix B is a directory of the built-in I/O subroutines, including their functions and starting addresses.

Appendix C describes differences among Apple II family members.

Appendix D describes some of the operating systems and languages supported by Apple Computer for the Apple IIe.

Appendix E contains conversion tables of interest to programmers.

Appendix F contains additional copies of some of the tables that appear in the body of the manual. The ones you will need to refer to often are duplicated here for easy reference.

Appendix G contains information about using Apple IIe 80-column text cards with the Apple IIe and high-level languages.

Appendix H discusses programming on the Apple IIe with the Apple Super Serial Card.

Appendix I describes the international keyboards and character sets. This appendix also contains schematic diagrams of the international circuit boards.

Appendix J contains the source listing of the Monitor firmware. You can refer to it to find out more about the operation of the Monitor subroutines listed in Appendix B.

Following Appendix J is a glossary defining many of the technical terms used in this manual. Some terms that describe the use of the Apple IIe are defined in the glossaries of the other manuals listed earlier.

Following the glossary is a selected bibliography of sources of additional information.

The Apple IIe family

Changes have been made in the Apple IIe since the original version was introduced. The first change resulted in a version called the *enhanced Apple IIe*. The latest version is called the *extended keyboard Apple IIe*. These versions are all described in this manual. Where there are differences between the original Apple IIe, the enhanced IIe, and the extended keyboard IIe, they will be called out in the manual. Otherwise, the three machines operate identically.

Identifying your Apple IIe

You can tell whether you have an enhanced or an original Apple IIe when you start up your computer: an original IIe will display "`Apple ][`" at the top of the monitor screen, while the enhanced Apple IIe will display "`Apple //e`". The extended keyboard Apple IIe is easily identified by the numeric keypad built into the keyboard.

The original Apple IIe

The original Apple IIe is the oldest member of the IIe family. It has the following features:

- the 6502 microprocessor
- 64K of RAM
- 40-column display (unless an optional 80-column text card is installed)

The enhanced Apple IIe

The enhanced Apple IIe includes the following changes from the original Apple IIe:

- The 65C02 microprocessor, which is an improved version of the 6502 microprocessor found in the original Apple IIe. The 65C02 uses less power, has 27 new **opcodes,** and runs at the same speed as the 6502. (See Chapter 7 and Appendix A.)
- A new video ROM containing the same MouseText characters found in the Apple IIc. (See Chapter 2.)
- New Monitor ROMs (the CD and EF ROMs) containing the enhanced Apple IIe firmware. (See Chapter 5.)
- The identification byte at $FBC0 has been changed. In the original Apple IIe it is $EA (decimal 234); in the enhanced Apple IIe it is $E0 (decimal 224).
- Recent models of the enhanced IIe include the Extended 80-Column Text Card as a standard accessory, thus increasing the available RAM in the enhanced IIe from 64K to 128K.

Opcode is short for *operation code* and is used to describe the basic instructions performed by the central processing unit of a computer.

The enhanced Apple IIe includes a number of improved features in addition to the changes listed above. The following sections describe the improved features of the enhanced IIe.

Startup drives

You can use startup (boot) devices other than a Disk II® to start up ProDOS® on the enhanced Apple IIe.

Apple II Pascal versions 1.3 and later may start up from slots 4, 5, or 6 on a Disk II, ProFile™, or other Apple II disk drive. Apple II Pascal versions 1.0 through 1.2 must start up from a Disk II in slot 6.

DOS 3.3 may be started from a Disk II in any slot.

When you turn on your Apple IIe, it searches for a disk drive controller to start up from, beginning with slot 7 and working down toward slot 1. As soon as a disk controller card is found, the Apple IIe will try to load and execute the operating system found on the disk. If the drive is not a Disk II, the operating system of the startup volume must be either ProDOS or Apple II Pascal (version 1.3 or later). If it is a Disk II, the startup volume may be any Apple II operating system.

Video firmware

The enhanced Apple IIe has improved 80-column firmware:

- The enhanced Apple IIe now supports lowercase input.
- Escape Control-E passes most control characters to the screen.
- Escape Control-D traps most control characters before they get to the screen.
- Escape R was removed because uppercase characters are no longer required by Applesoft.

Video enhancements

Both 80-column Pascal and 80-column mode Applesoft output are faster than before, and scrolling is smoother. 40-column Pascal performance is unchanged.

In the original Apple IIe, characters echoed to COUT1 during 80-column operation were printed in every other column; the enhanced Apple IIe firmware now prints the characters in each column.

Applesoft 80-column support

The following Applesoft routines now work in 80-column mode:

- HTAB
- TAB
- SPC
- comma tabbing in PRINT statements

Applesoft lowercase support

Applesoft now lets you do all your programming in lowercase. When you list your programs, all Applesoft keywords and variable names are automatically in uppercase characters; literal strings and the contents of DATA and REM statements are unchanged.

Apple II Pascal

Apple II Pascal (version 1.2 and later) can now use a ProFile hard disk through the Pascal ProFile Manager.

To find out more, see the *Pascal ProFile Manager* manual.

The Pascal 1.1 firmware no longer supports the control character that switches from 80-column to 40-column operation. This control character is no longer supported because it can put Pascal into a condition where the exact memory configuration is not known.

System Monitor enhancements

Enhancements to the Apple IIe's built-in Monitor (described in Chapter 5 in this manual) include the following:

- lowercase input
- ASCII input mode
- Monitor Search command
- the Mini-Assembler

Interrupt handling

Interrupt-handler support in the enhanced Apple IIe firmware now handles any Apple IIe memory configuration.

The extended keyboard Apple IIe

The extended keyboard Apple IIe includes the following changes from the enhanced Apple IIe:

- The new keyboard contains a built-in 18-key numeric keypad.
- The Extended 80-Column Text Card is a standard feature. The card is shipped installed in the auxiliary slot.
- One 128K ROM IC replaces the two 64K Monitor ROM ICs (the CD and EF ROMs).
- Two 64Kx4 RAM ICs replace the eight 64Kx1 RAM ICs.
- The single-wire Shift-key mod is standard.

RAM upgrade

Both the original Apple IIe and the enhanced Apple IIe are 64K machines, expandable to 128K through the use of auxiliary memory cards like the Extended 80-Column Text Card. The extended keyboard Apple IIe has 64K of main memory, mounted on the circuit board. However, because the Extended 80-Column Text Card is now a standard feature, providing 64K of auxiliary memory, the extended keyboard IIe comes "pre-expanded" to 128K of RAM.

The eight 64Kx1 RAM ICs on the original and enhanced Apple IIe circuit boards have been replaced by two 64Kx4 ICs on the extended keyboard IIe circuit board. This means that the extended keyboard Apple IIe has two RAM ICs instead of eight like the original and enhanced IIe's. Pin-out diagrams for both RAM IC configurations are provided in Chapter 7.

Single-wire Shift-key mod

The single-wire Shift-key mod is an option jumper point on the circuit board that lets the extended keyboard Apple IIe detect the Shift key with the mouse active. From a practical standpoint, the single-wire Shift-key mod allows mouse-based programs to use "Shift-click" control sequences on the extended keyboard IIe.

The single-wire Shift-key mod option jumper is labeled X6 on the circuit board.

Symbols used in this manual

Special text in this manual is set off in several different ways, as shown in these examples.

Warning Important warnings appear like this. These flag potential danger to the Apple IIe, its software, or you.

Important Text set off in a box like this is less urgent or threatening than text placed inside a Warning box, but still of a critical nature.

Extended keyboard IIe Text set off like this defines the differences in features or operation between the three versions of the Apple IIe.

Definitions, cross-references, and other short items appear in marginal glosses like this.

❖ *By the way:* Information that is useful but incidental to the text is set off like this. You may want to skip over such information and return to it later.

Terms that are defined in a marginal gloss or in the glossary appear in **boldface.**

Words that appear on the screen are shown in a monospaced font: `It looks like this.`



Chapter 1

Introduction

This first chapter introduces you to the Apple IIe itself. It shows you what the inside looks like, identifies the main components that make up the machine, and tells you where to find information about each

Removing the cover

Remove the cover of the Apple IIe by pulling up on the back edge until the fasteners on either side pop loose, then move the cover an inch or so toward the rear of the machine to free the front of the cover, as shown in Figure 1-1. What you will see is shown in Figure 1-2.

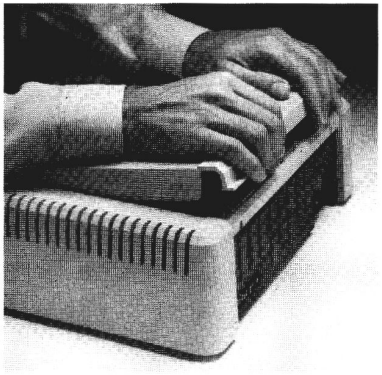

Figure 1-1
Removing the cover

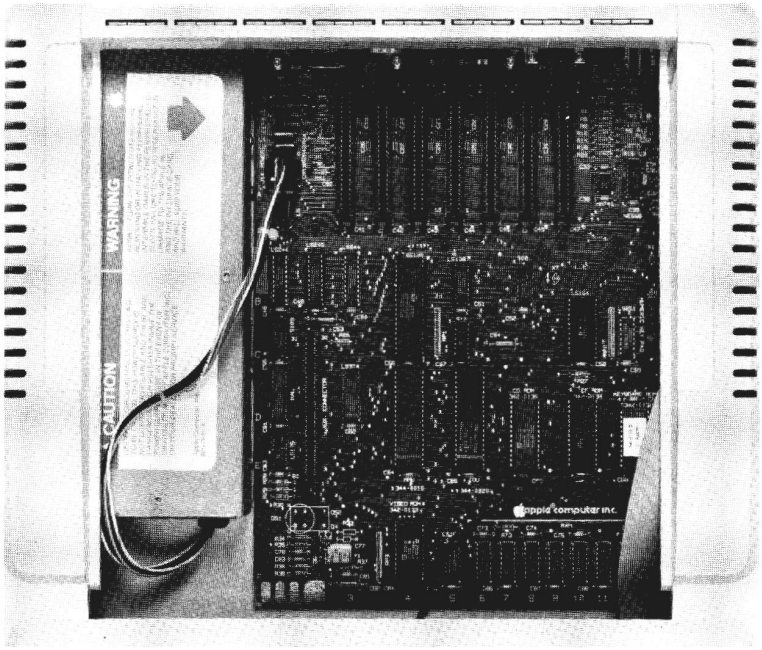

Figure 1-2
Apple IIe with the cover off

Warning There is a red LED (light-emitting diode) inside the Apple IIe, in the left rear corner of the circuit board. If the LED is on, it means that the power is on and you must turn it off before you insert or remove anything. To avoid damaging the Apple IIe, don't even think of changing anything inside it without first turning off the power.

The keyboard

The keyboard is the primary input device for the Apple IIe. As shown in Figure 1-3 it has a normal typewriter layout, uppercase and lowercase, with all of the special characters in the **ASCII** character set. The keyboard is fully integrated into the machine; its operation is described in the first part of Chapter 2. Firmware subroutines for reading the keyboard are described in Chapter 3.

ASCII stands for *American Standard Code for Information Interchange.*

Extended keyboard IIe

The extended keyboard IIe keyboard is laid out differently from the original and enhanced IIe keyboards, and includes an 18-key numeric keypad. The extended keyboard IIe keyboard is shown in Figure 1-4.

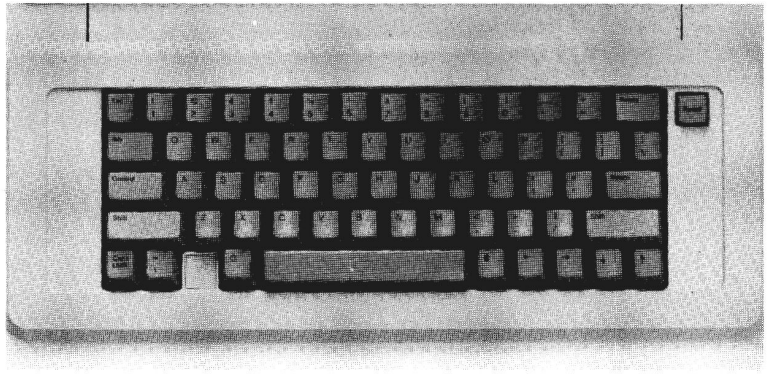

Figure 1-3
Original and enhanced IIe keyboard

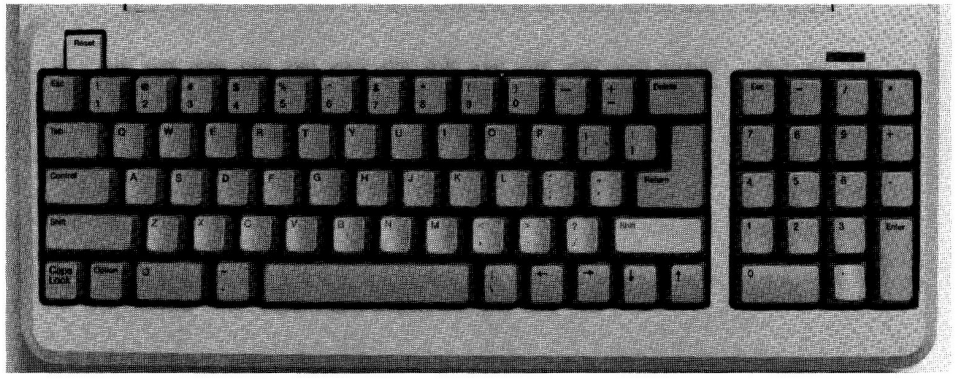

Figure 1-4
Extended keyboard IIe keyboard

The speaker

The Apple IIe has a small loudspeaker in the bottom of the case. The speaker enables Apple IIe programs to produce a variety of sounds that make the programs more useful and interesting. The way programs control the speaker is described in Chapter 2.

The power supply

The power supply is inside the flat metal box along the left side of the interior of the Apple IIe. It provides power for the main board and for any peripheral cards installed in the Apple IIe.

The power supply produces four voltages: +5V, –5V, +12V, and –12V. It is a high-efficiency switching supply; it includes special circuits that protect it and the rest of the Apple IIe against short circuits and other mishaps. Complete specifications of the Apple IIe power supply appear in Chapter 7.

Warning The power switch and the socket for the power cord are mounted directly on the back of the power supply's metal case. This mounting ensures that all the circuits that carry dangerous voltages are inside the power supply. Do not defeat this design feature by attempting to open the power supply.

The circuit board

All the electronic parts of the Apple IIe are attached to the circuit board, which is mounted flat in the bottom of the case.

Figure 1-5 shows the main integrated circuits (ICs) in the original and enhanced Apple IIe's. They are the central processing unit (CPU), the keyboard encoder, the keyboard read-only memory (ROM), the two interpreter ROMs, the video ROM, and the custom integrated circuits: the Input Output Unit (IOU), the Memory Management Unit (MMU), and the Programmed Array Logic (PAL) device.

Extended keyboard IIe

The extended keyboard IIe circuit board layout is much the same as that shown in Figure 1-5. However, the two Interpreter ROMs (CD ROM and EF ROM) have been replaced by a single ROM, and the eight RAM ICs have been replaced by two RAM ICs.

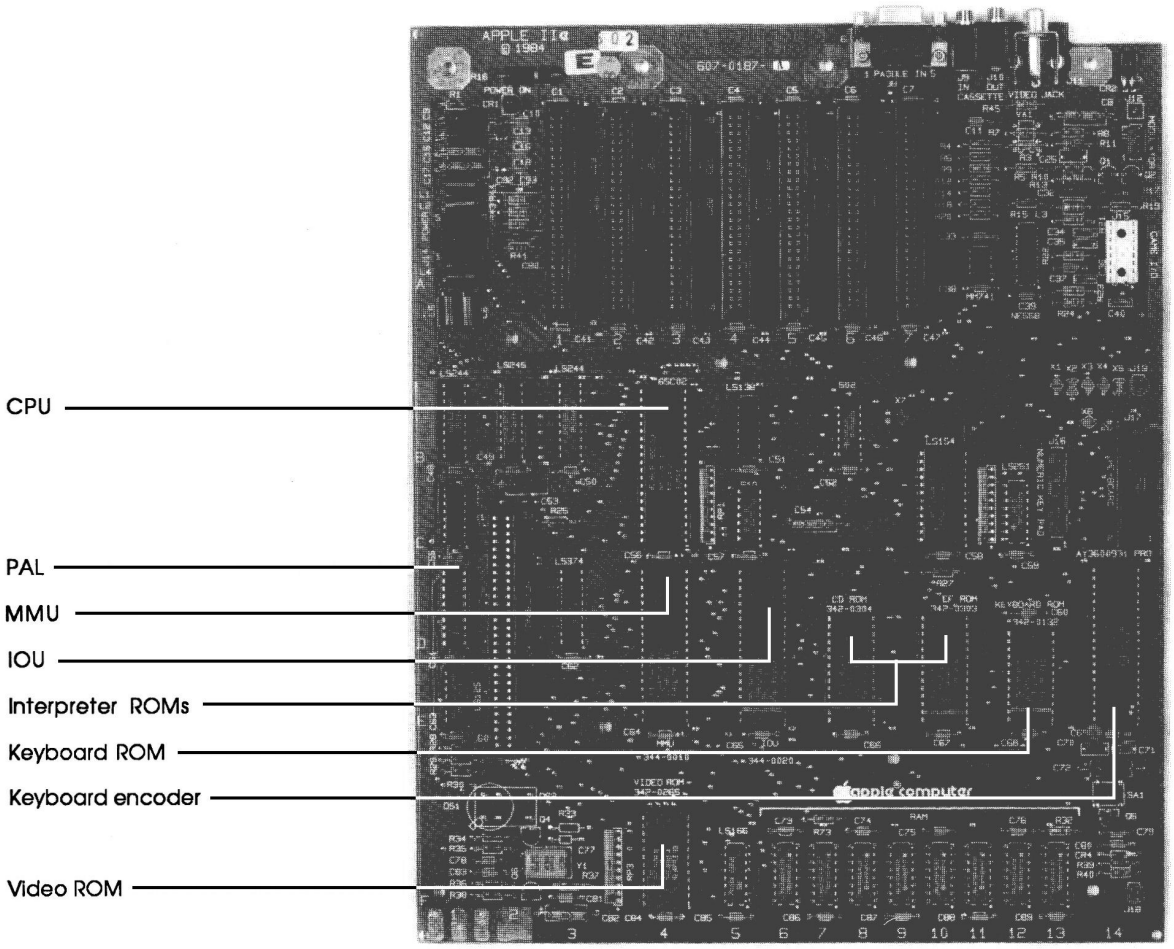

Figure 1-5
Circuit board

The CPU used by both the enhanced IIe and the extended keyboard IIe is the 65C02 microprocessor. The 65C02 is an 8-bit microprocessor with a 16-bit address bus. The 65C02 runs at 1.02 MHz and performs up to 500,000 8-bit operations per second. The specifications for the 65C02 are given in Appendix A.

The original version of the Apple IIe uses the 6502 microprocessor. You can tell which version of Apple IIe you have by starting up your machine. An original Apple IIe displays "`Apple ] [`" at the top of the screen during startup, while the enhanced and the extended keyboard Apple IIe's display "`Apple //e`". This manual will call out specific areas where the three versions of the Apple IIe differ.

Original IIe

The original IIe uses the 6502 microprocessor. The 6502 is very similar to the 65C02, except that it lacks ten instructions and two addressing modes found in the 65C02. In addition, the 6502 is an NMOS device, which means its power consumption is higher than the CMOS 65C02. Except for these differences, and some minor differences in the number of clock cycles required for execution of some instructions, the 6502 and 65C02 are identical.

The keyboard is decoded by an AY-3600-PRO or 9600-PRO integrated circuit and a read-only memory (ROM). These devices are described in Chapter 7.

The interpreter ROMs (or ROM, in the case of the extended keyboard IIe) are integrated circuits that contain the Applesoft BASIC interpreter. The ROMs are described in Chapter 7. The Applesoft language is described in the *Applesoft Tutorial* and the *Applesoft BASIC Programmer's Reference Manual.*

Two of the large ICs are custom-made for the Apple IIe: the MMU and the IOU. The MMU IC contains most of the logic that controls memory addressing in the Apple IIe. The organization of the memory is described in Chapter 4; the circuitry in the MMU itself is described in Chapter 7.

The IOU IC contains most of the logic that controls the built-in input/output features of the Apple IIe. These features are described in Chapter 2 and Chapter 3; the IOU circuits are described in Chapter 7.

Connectors on the circuit board

The seven slots lined up along the back of the Apple IIe circuit board are the expansion slots, sometimes called *peripheral slots.* (See Figure 1-6.) These slots make it possible to attach additional hardware to the Apple IIe. Chapter 6 tells you how your programs deal with the devices that plug into these slots; Chapter 7 describes the circuitry for the slots themselves.

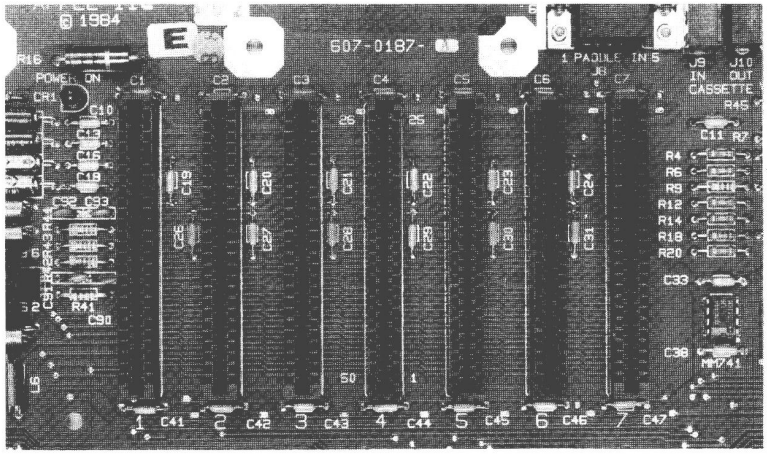

Figure 1-6
Expansion slots

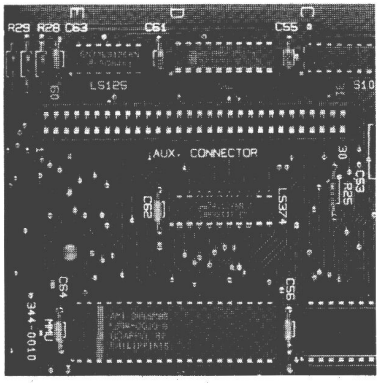

Figure 1-7
Auxiliary slot

The large slot next to the left side of the circuit board is the auxiliary slot (Figure 1-7). If your Apple IIe has an auxiliary memory card or 80-Column Text Card, it will be installed in this slot. The Apple IIe use this slot for the Extended 80-Column Text Card. Chapter 2 describes the 80-column display feature. The hardware and firmware interfaces to either type of card are described in Chapter 7.

There are also smaller connectors for game I/O and for an internal RF (radio frequency) modulator. These connectors are described in Chapter 7.

Connectors on the back panel

The back of the Apple IIe has two miniature phone jacks for connecting a cassette recorder: an RCA-type jack for a video monitor, and a 9-pin D-type miniature connector for the hand controls, as shown in Figure 1-8. In addition to these, there are spaces for additional connectors used with the peripheral cards installed in the Apple IIe. The installation manuals for the peripheral cards contain instructions for installing the peripheral connectors.

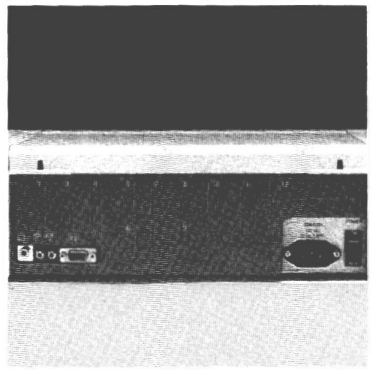

Figure 1-8
Back panel connectors

Chapter 2

Built-in I/O Devices

This chapter describes the input and output (I/O) devices built into the Apple IIe in terms of their functions and the way they are used by programs. The built-in I/O devices are

- the keyboard
- the video-display generator
- the speaker
- the cassette input and output
- the game input and output

For descriptions of the built-in I/O hardware, refer to Chapter 7.

At the lowest level, programs use the built-in I/O devices by reading and writing to dedicated memory locations. This chapter lists these locations for each I/O device. It also gives the locations of the internal soft switches that select the different display modes of the Apple IIe.

Built-in I/O firmware routines are described in Chapter 3.

- *Built-in I/O routines:* This method of input and output—loading and storing directly to specific locations in memory—is not the only method you can use. For many of your programs, it may be more convenient to call the built-in I/O routines stored in the Apple IIe's firmware.

The keyboard

The primary built-in input device for the Apple IIe is the keyboard. The original and enhanced IIe keyboards have 63 keys, while the extended keyboard IIe keyboard has 81 keys. Both keyboard types have automatic repeat, which means that if you press any key longer than you would during normal typing, the character code for that key will be sent continuously until you release the key. Both keyboard types also allow you to hold down any number of keys and still press another key; this is known as *N-key rollover.*

The keyboard layout shown in Figure 2-1 is for the original and enhanced IIe keyboards. The keyboard layout shown in Figure 2-2 is for the extended keyboard IIe keyboard.

Apple IIe's manufactured for sale outside the United States have a slightly different standard keyboard arrangement and include provisions for switching between different character sets. These differences are described in Appendix I.



Figure 2-1
Original and enhanced IIe keyboard

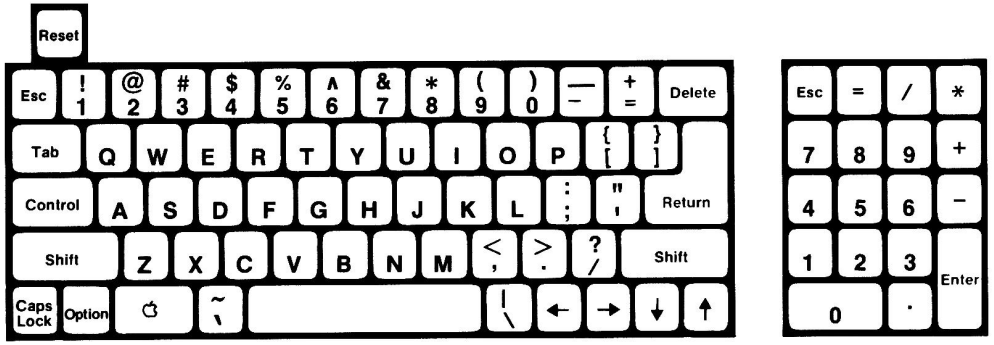

Figure 2-2
Extended keyboard IIe keyboard

In addition to the keys normally used for typing characters, there are four cursor-control keys with arrows: left, right, down, and up. The cursor-control keys can be read the same as other keys; their codes are $08, $15, $0A, and $0B. (See Table 2-2.)

Three special keys—Control, Shift, and Caps Lock—change the codes generated by the other keys. The Control key is similar to the ASCII CTRL key.

Three other keys have special functions: the Reset key, and two keys marked with apples, one outlined (Open Apple) and one solid (Solid Apple). Pressing the Reset key with the Control key depressed resets the Apple IIe, as described in Chapter 4. The Apple keys are connected to the one-bit game inputs, described later in this chapter.

Extended keyboard IIe

On the extended keyboard IIe the Solid Apple key is labeled *Option;* the Solid Apple and Option keys are functionally identical. Also note that manuals accompanying products with the Solid Apple labeled as *Option* may refer to the Open Apple key as simply the *Apple key.*

See Chapter 7 for a complete description of the electrical interface to the keyboard.

The electrical interface between the Apple IIe and the keyboard is a ribbon cable with a 26-pin connector. This cable carries the keyboard signals to the encoding circuitry on the main board.

Reading the keyboard

The keyboard encoder and ROM generate all 128 ASCII codes, so all the special character codes in the ASCII character set are available from the keyboard. Machine-language programs obtain character codes from the keyboard by reading a byte from the keyboard-data location shown in Table 2-1.

Table 2-1
Keyboard memory locations

Location		
Hex	**Decimal**	**Description**
$C000	49152 –16384	Keyboard data and strobe
$C010	49168 –16368	Any-key-down flag and clear-strobe switch

Hexadecimal refers to the base-16 number system, which uses the digits 0 through 9 and the six letters A through F to represent values from 10 to 15.

Your programs can get the code for the last key pressed by reading the keyboard-data location. Table 2-1 gives this location in three different forms: the **hexadecimal** value used in assembly language, indicated by a preceding dollar sign ($); the decimal value used in Applesoft BASIC; and the complementary decimal value used in Apple Integer BASIC. (Integer BASIC requires that values greater than 32,767 be written as the number obtained by subtracting 65,536 from the value. These are the decimal numbers shown as negative in tables in this manual; refer to the *Apple II BASIC Programming Manual.*) The low-order seven bits of the byte at the keyboard location contain the character code; the high-order bit of this byte is the strobe bit, described below.

Your program can find out whether any key is down, except the Reset, Control, Shift, Caps Lock, Open Apple, and Solid Apple (or Option, on the extended keyboard IIe) keys, by reading from location 49152 (hexadecimal $C000 or complementary decimal –16384). The high-order bit (bit 7) of the byte you read at this location is called *any-key-down;* it is 1 if a key is down, and 0 if no key is down. The value of this bit is 128; if a BASIC program gets this information with a PEEK, the value is 128 or greater if any key is down, and less than 128 if no key is down.

The Open Apple and Solid Apple keys are connected to switches 0 and 1 of the game I/O connector inputs. If OA is pressed, switch 0 is "pressed," and if Solid Apple is pressed, switch 1 is "pressed."

Extended keyboard IIe

On the extended keyboard IIe, the Shift key is connected to switch 2 of the game I/O ports via the X6 jumper (single-wire Shift-key mod jumper).

The strobe bit is the high-order bit of the keyboard-data byte. After any key has been pressed, the strobe bit is high. It remains high until you reset it by reading or writing at the clear-strobe location. This location is a combination flag and switch; the flag tells whether any key is down, and the switch clears the strobe bit. The switch function of this memory location is called a *soft switch* because it is controlled by software. In this case, it doesn't matter whether the program reads or writes, and it doesn't matter what data the program writes: the only action that occurs is the resetting of the keyboard strobe. Similar soft switches, described later, are used for controlling other functions in the Apple IIe.

Important

Any time you read the any-key-down flag, you also clear the keyboard strobe. If your program needs to read both the flag and the strobe, it must read the strobe bit first.

After the keyboard strobe has been cleared, it remains low until another key is pressed. Even after you have cleared the strobe, you can still read the character code at the keyboard location. The data byte has a different value, because the high-order bit is no longer set, but the ASCII code in the seven low-order bits is the same until another key is pressed. Table 2-2 shows the ASCII codes for most of the keys on the keyboard of the Apple IIe.

There are several special-function keys that do not generate ASCII codes. For example, you cannot read the Control, Shift, and Caps Lock keys directly, but pressing one of these keys alters the character codes produced by the other keys.

Extended keyboard IIe

As a result of the single-wire Shift-key mod, the Shift key *can* be read directly in the extended keyboard IIe.

Another key that doesn't generate a code is Reset, located at the upper-right corner of the keyboard; it is connected directly to the Apple IIe's circuits. Pressing Reset with Control depressed normally causes the system to stop whatever program it's running and restart itself. This restarting process is called the *reset routine.*

The reset routine is described in Chapter 4.

Two more special keys are the Apple keys, Open Apple and Solid Apple, located on either side of the Space bar. These keys are connected to the one-bit game inputs, which are described later in this chapter in the section "Switch Inputs." Pressing them in combination with the Control and Reset keys causes the built-in firmware to perform special reset and self-test cycles, described with the reset routine in Chapter 4.

Extended keyboard IIe

The Open Apple and Option keys are both located on the left side of the Space bar on the extended keyboard IIe. See Figure 2-2 for a diagram of the keyboard layout for the extended keyboard IIe.

Table 2-2
Keys and ASCII codes

	Normal		Control		Shift		Both	
Key	**Code**	**Char**	**Code**	**Char**	**Code**	**Char**	**Code**	**Char**
Delete	7F	DEL	7F	DEL	7F	DEL	7F	DEL
Left Arrow	08	BS	08	BS	08	BS	08	BS
Tab	09	HT	09	HT	09	HT	09	HT
Down Arrow	0A	LF	0A	LF	0A	LF	0A	LF
Up Arrow	0B	VT	0B	VT	0B	VT	0B	VT
Return	0D	CR	0D	CR	0D	CR	0D	CR
Right Arrow	15	NAK	15	NAK	15	NAK	15	NAK
Escape	1B	ESC	1B	ESC	1B	ESC	1B	ESC
Space	20	SP	20	SP	20	SP	20	SP
' "	27	'	27	'	22	"	22	"
, <	2C	,	2C	,	3C	<	3C	<

Table 2-2 (continued)
Keys and ASCII codes

	Normal		Control		Shift		Both	
Key	**Code**	**Char**	**Code**	**Char**	**Code**	**Char**	**Code**	**Char**
- _	2D	-	1F	US	5F	_	1F	US
. >	2E	.	2E	.	3E	>	3E	>
/ ?	2F	/	2F	/	3F	?	3F	?
0)	30	0	30	0	29	)	29	)
1 !	31	1	31	1	21	!	21	!
2 @	32	2	00	NUL	40	@	00	NUL
3 #	33	3	33	3	23	#	23	#
4 $	34	4	34	4	24	$	24	$
5 %	35	5	35	5	25	%	25	%
6 ^	36	6	1E	RS	5E	^	1E	RS
7 &	37	7	37	7	26	&	26	&
8 *	38	8	38	8	2A	*	2A	*
9 (	39	9	39	9	28	(	28	(
; :	3B	;	3B	;	3A	:	3A	:
= +	3D	=	3D	=	2B	+	2B	+
[{	5B	[	1B	ESC	7B	{	1B	ESC
\ |	5C	\	1C	FS	7C	|	1C	FS
] }	5D	]	1D	GS	7D	}	1D	GS
` ~	60	`	60	`	7E	~	7E	~
A	61	a	01	SOH	41	A	01	SOH
B	62	b	02	STX	42	B	02	STX
C	63	c	03	ETX	43	C	03	ETX
D	64	d	04	EOT	44	D	04	EOT
E	65	e	05	ENQ	45	E	05	ENQ
F	66	f	06	ACK	46	F	06	ACK
G	67	g	07	BEL	47	G	07	BEL
H	68	h	08	BS	48	H	08	BS
I	69	i	09	HT	49	I	09	HT
J	6A	j	0A	LF	4A	J	0A	LF
K	6B	k	0B	VT	4B	K	0B	VT
L	6C	l	0C	FF	4C	L	0C	FF
M	6D	m	0D	CR	4D	M	0D	CR
N	6E	n	0E	SO	4E	N	0E	SO
O	6F	o	0F	SI	4F	O	0F	SI
P	70	p	10	DLE	50	P	10	DLE
Q	71	q	11	DC1	51	Q	11	DC1
R	72	r	12	DC2	52	R	12	DC2
S	73	s	13	DC3	53	S	13	DC3
T	74	t	14	DC4	54	T	14	DC4
U	75	u	15	NAK	55	U	15	NAK

Table 2-2 (continued)
Keys and ASCII codes

	Normal		Control		Shift		Both	
Key	**Code**	**Char**	**Code**	**Char**	**Code**	**Char**	**Code**	**Char**
V	76	v	16	SYN	56	V	16	SYN
W	77	w	17	ETB	57	W	17	ETB
X	78	x	18	CAN	58	X	18	CAN
Y	79	y	19	EM	59	Y	19	EM
Z	7A	z	1A	SUB	5A	Z	1A	SUB

Note: Codes are shown here in hexadecimal; to find the decimal equivalents, refer to Table E-3.

Extended keyboard IIe

The ASCII codes generated by the numeric keypad on the extended keyboard IIe are the same as those for the corresponding characters on the main keyboard. See Table 2-2.

The video display generator

The primary output device of the Apple IIe is the video display. You can use any ordinary video monitor, either color or black-and-white, to display video information from the Apple IIe. An ordinary monitor is one that accepts composite video compatible with the standard set by the NTSC (National Television Standards Committee). If you use Apple IIe color graphics with a monochrome (single-color) monitor, the display will appear as that color (black, for example) and various patterns made up of shades of that color.

If you are using only 40-column text and graphics modes, you can use a television set for your video display. If the TV set has an input connector for composite video, you can connect it directly to your Apple IIe; if it does not, you'll need to attach a radio frequency (RF) video modulator between the Apple IIe and the television set.

Important

With the 80-column text card installed, the Apple IIe can produce an 80-column text display. However, if you use an ordinary color or black-and-white television set, 80-column text will be too blurry to read. For a clear 80-column display, you must use a high-resolution video monitor with a bandwidth of 14 MHz or greater.

The specifications for the video display are summarized in Table 2-3.

Original IIe

Note that MouseText characters are not included in the original version of the Apple IIe.

For a full description of the video signal and the connections to the Molex-type pins, refer to the section "Video Output Signals" in Chapter 7.

The video signal produced by the Apple IIe is NTSC-compatible composite color video. It is available at three places: the RCA-type phono jack on the back of the Apple IIe, the single Molex-type pin on the main circuit board near the back on the right side, and one of the group of four Molex-type pins in the same area on the main board. Use the RCA-type phono jack to connect a video monitor or an external video modulator; use the Molex pins to connect the type of video modulator that fits inside the Apple IIe case.

Table 2-3
Video display specifications

Display modes	40-column text; map: Figure 2-3 80-column text; map: Figure 2-4 Low-resolution color graphics; map: Figure 2-8 High-resolution color graphics; map: Figure 2-9 Double high-res color graphics; map: Figure 2-10
Text capacity	24 lines by 80 columns (character positions)
Character set	96 ASCII characters (uppercase and lowercase)
Display formats	Normal, inverse, flashing, MouseText (Table 2-4)
Low-resolution graphics	16 colors (Table 2-5), 40 horizontal by 48 vertical; map: Figure 2-8
High-resolution graphics	6 colors (Table 2-6), 140 horizontal by 192 vertical (restricted) Black-and-white: 280 horizontal by 192 vertical; map: Figure 2-9
Double high-resolution graphics	16 colors (Table 2-7), 140 horizontal by 192 vertical (no restrictions) Black-and-white: 560 horizontal by 192 vertical; map: Figure 2-10

The Apple IIe can produce seven different kinds of video display:

- text, 24 lines of 40 characters
- text, 24 lines of 80 characters (with optional text card)
- low-resolution graphics, 40 by 48, in 16 colors
- high-resolution graphics, 140 by 192, in 6 colors
- high-resolution graphics, 280 by 192, in black and white
- double high-resolution graphics, 140 by 192, in 16 colors (with optional 64K text card)
- double high-resolution graphics, 560 by 192, in black and white (with optional 64K text card)

The 2 text modes can display all 96 ASCII characters: uppercase and lowercase letters, numbers, and symbols. The enhanced and extended keyboard Apple IIe's can also display MouseText characters.

Any of the graphics displays can have four lines of text at the bottom of the screen. The text may be either 40-column or 80-column, except that double high-resolution graphics may only have 80-column text at the bottom of the screen. Graphics displays with text at the bottom are called *mixed-mode displays*.

The low-resolution graphics display is an array of colored blocks, 40 wide by 48 high, in any of 16 colors. In mixed mode, the four lines of text replace the bottom eight rows of blocks, leaving 40 rows of 40 blocks each.

The high-resolution graphics display is an array of dots, 280 wide by 192 high. There are six colors available in high-resolution displays, but a given dot can use only four of the six colors. If color is used, the display is 140 dots wide by 192 high. In mixed mode, the 4 lines of text replace the bottom 32 rows of dots, leaving 160 rows of 280 dots each.

The double high-resolution graphics display uses main and auxiliary memory to display an array of dots, 560 wide by 192 high. All the dots are visible in black and white. If color is used, the display is 140 dots wide by 192 high with 16 colors available. In mixed mode, the 4 lines of text replace the bottom 32 rows of dots, leaving 160 rows of 560 (or 140) dots each. In mixed mode, the text lines can be 80 columns wide only.

Text modes

The text characters displayed include the uppercase and lowercase letters, the ten digits, punctuation marks, and special characters. Each character is displayed in an area of the screen that is seven dots wide by eight dots high. The characters are formed by a dot matrix five dots wide, leaving two blank columns of dots between characters in a row, except for MouseText characters, some of which are seven dots wide. Except for lowercase letters with descenders and some MouseText characters, the characters are only seven dots high, leaving one blank line of dots between rows of characters.

The normal display has white (or other single color) dots on a black background. Characters can also be displayed as black dots on a white background; this is called *inverse format.*

Text character sets

The Apple IIe can display either of two text character sets: the primary set or an alternate set. The forms of the characters in the two sets are actually the same, but the available display formats are different. The display formats are

- normal, with white dots on a black screen
- inverse, with black dots on a white screen
- flashing, alternating between normal and inverse

With the primary character set, the Apple IIe can display uppercase characters in all three formats: normal, inverse, and flashing. Lowercase letters can only be displayed in normal format. The primary character set is compatible with most software written for the Apple II and Apple II Plus models, which can display text in flashing format but don't have lowercase characters.

The alternate character set displays characters in either normal or inverse format. In normal format, you can get

- uppercase letters
- lowercase letters
- numbers
- special characters

In inverse format, you can get

- MouseText characters (on the enhanced and extended keyboard IIe's)

- uppercase letters
- lowercase letters
- numbers
- special characters

The MouseText characters that replace the alternate uppercase inverse characters in the range of $40–$5F in the original Apple IIe are inverse characters, but they don't look like it because of the way they have been constructed.

You select the character set by means of the alternate-text soft switch, ALTCHAR, described later in the section "Display Mode Switching." Table 2-4 shows the character codes in hexadecimal for the Apple IIe primary and alternate character sets in normal, inverse, and flashing formats.

Each character on the screen is stored as one byte of display data. The low-order six bits make up the ASCII code of the character being displayed. The remaining two (high-order) bits select inverse or flashing format and uppercase or lowercase characters. In the primary character set, bit 7 selects inverse or normal format and bit 6 controls character flashing. In the alternate character set, bit 6 selects between uppercase and lowercase, according to the ASCII character codes, and flashing format is not available.

Table 2-4
Display character sets

Hex values	Primary character set		Alternate character set	
	Character type	Format	Character type	Format
$00–$1F	Uppercase letters	Inverse	Uppercase letters	Inverse
$20–$3F	Special characters	Inverse	Special characters	Inverse
$40–$5F	Uppercase letters	Flashing	MouseText	Inverse
$60–$7F	Special characters	Flashing	Lowercase letters	Inverse
$80–$9F	Uppercase letters	Normal	Uppercase letters	Normal
$A0–$BF	Special characters	Normal	Special characters	Normal
$C0–$DF	Uppercase letters	Normal	Uppercase letters	Normal
$E0–$FF	Lowercase letters	Normal	Lowercase letters	Normal

Note: To identify particular characters and values, refer to Table 2-2.

Original IIe In the alternate character set of the original Apple IIe, characters in the range $40–$5F are uppercase inverse.

40-column versus 80-column text

The Apple IIe has two modes of text display: 40-column and 80-column. (The 80-column display mode described in this manual is the one you get with the Apple IIe 80-Column Text Card or other auxiliary-memory card installed in the auxiliary slot.) The number of dots in each character does not change, but the characters in 80-column mode are only half as wide as the characters in 40-column mode. Compare Figure 2-3 and Figure 2-4. On an ordinary color or black-and-white television set, the narrow characters in the 80-column display blur together; you must use the 40-column mode to display text on a television set.

Graphics modes

The Apple IIe can produce video graphics in three different modes. All the graphics modes treat the screen as a rectangular array of spots. Normally, your programs will use the features of some high-level language to draw graphics dots, lines, and shapes in these arrays; this section describes the way the resulting graphics data are stored in the Apple IIe's memory.

Low-resolution graphics

In the low-resolution graphics mode, the Apple IIe displays an array of 48 rows by 40 columns of colored blocks. Each block can be any one of sixteen colors, including black and white. On a black-and-white monitor or television set, these colors appear as black, white, and three shades of gray. There are no blank dots between blocks; adjacent blocks of the same color merge to make a larger shape.

Data for the low-resolution graphics display is stored in the same part of memory as the data for the 40-column text display. Each byte contains data for two low-resolution graphics blocks. The two blocks are displayed one atop the other in a display space the same size as a 40-column text character, seven dots wide by eight dots high.

```
]LIST 0,100

10  REM  APPLESOFT CHARACTER DEMO
20  TEXT : HOME
30  PRINT : PRINT "Applesoft Char
     acter Demo"
40  PRINT : PRINT "Which characte
     r set--"
50  PRINT : INPUT "Primary (P) or
     Alternate (A) ?";A$
60  IF  LEN (A$) < 1 THEN 50
65  LET A$ =  LEFT$ (A$,1)
70  IF A$ = "P" THEN  POKE 49166,
     0
80  IF A$ = "A" THEN  POKE 49167,
     0
90  PRINT : PRINT "...printing th
     e same line, first"
100  PRINT " in NORMAL, then INVE
      RSE ,then FLASH:": PRINT
]
```

Figure 2-3
40-column text display

```
]LIST 0,1100

10 REM APPLESOFT CHARACTER DEMO
20 TEXT : HOME
30 PRINT : PRINT "Applesoft Character Demo"
40 PRINT : PRINT "Which character set--"
50 PRINT : INPUT "Primary (P) or Alternate (A) ?";A$
60 IF  LEN (A$) < 1 THEN 50
70 LET A$ = LEFT$ (A$,1)
80 IF A$ = "P" THEN POKE 49166,0
90 IF A$ = "A" THEN POKE 49167,0
100 PRINT : PRINT "...printing the same line, first"
150 PRINT " in NORMAL, then INVERSE ,then FLASH:": PRINT
160 NORMAL : GOSUB 1000
170 INVERSE : GOSUB 1000
180 FLASH : GOSUB 1000
190 NORMAL : PRINT : PRINT : PRINT "Press any key to repeat." GET A$
200 GOTO 10
1000 PRINT : PRINT "SAMPLE TEXT: Now is the time--12:00"
1100 RETURN
]
```

Figure 2-4
80-column text display

Table 2-5
Low-resolution graphics colors

Nibble value		
Dec	**Hex**	**Color**
0	$00	Black
1	$01	Magenta
2	$02	Dark blue
3	$03	Purple
4	$04	Dark green
5	$05	Gray
6	$06	Medium blue
7	$07	Light blue
8	$08	Brown
9	$09	Orange
10	$0A	Gray 2
11	$0B	Pink
12	$0C	Light green
13	$0D	Yellow
14	$0E	Aquamarine
15	$0F	White

Note: Colors may vary, depending upon the controls on the monitor or TV set.

Half a byte—four bits, or one nibble—is assigned to each graphics block. Each nibble can have a value from 0 to 15, and this value determines which one of 16 colors appears on the screen. The colors and their corresponding nibble values are shown in Table 2-5. In each byte, the low-order nibble sets the color for the top block of the pair, and the high-order nibble sets the color for the bottom block. Thus, a byte containing the hexadecimal value $D8 produces a brown block atop a yellow block on the screen.

As explained later in the section "Video Display Pages," the text display and the low-resolution graphics display use the same area in memory. Most programs that generate text and graphics clear this part of memory when they change display modes, but it is possible to store data as text and display it as graphics, or vice-versa. All you have to do is change the mode switch, described later in this chapter in the section "Display Mode Switching," without changing the display data. This usually produces meaningless jumbles on the display, but some programs have used this technique to good advantage for producing complex low-resolution graphics displays quickly.

High-resolution graphics

In the high-resolution graphics mode, the Apple IIe displays an array of colored dots in 192 rows and 280 columns. The colors available are black, white, purple, green, orange, and blue, although the colors of the individual dots are limited, as described later in this section. Adjacent dots of the same color merge to form a larger colored area.

Data for the high-resolution graphics displays are stored in either of two 8192-byte areas in memory. These areas are called *high-resolution Page 1* and *Page 2;* think of them as buffers where you can put data to be displayed. Normally, your programs will use the features of some high-level language to draw graphics dots, lines, and shapes to display; this section describes the way the resulting graphics data are stored in the Apple IIe's memory.

The Apple IIe high-resolution graphics display is bit-mapped: each dot on the screen corresponds to a bit in the Apple IIe's memory. The seven low-order bits of each display byte control a row of seven adjacent dots on the screen, and forty adjacent bytes in memory control a row of 280 (7 times 40) dots. The least significant bit of each byte is displayed as the leftmost dot in a row of seven, followed by the second-least significant bit, and so on, as shown in Figure 2-5. The eighth bit (the most significant) of each byte is not displayed; it selects one of two color sets, as described later.

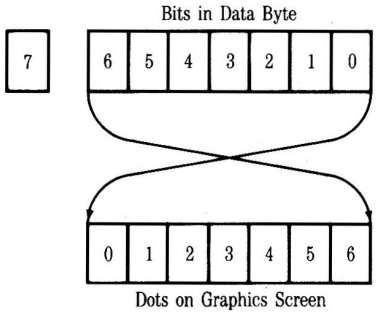

Figure 2-5
High-resolution display bits

On a black-and-white monitor, there is a simple correspondence between bits in memory and dots on the screen. A dot is white if the bit controlling it is on (1), and the dot is black if the bit is off (0). On a black-and-white television set, pairs of dots blur together; alternating black and white dots merge to a continuous gray.

On an NTSC color monitor or a color television set, a dot whose controlling bit is off (0) is black. If the bit is on, the dot will be white or a color, depending on its position, the dots on either side, and the setting of the high-order bit of the byte.

Call the left-most column of dots column zero, and assume (for the moment) that the high-order bits of all the data bytes are off (0). If the bits that control dots in even-numbered columns (0, 2, 4, and so forth) are on, the dots are purple; if the bits that control odd-numbered columns are on, the dots are green—but only if the dots on both sides of a given dot are black. If two adjacent dots are both on, they are both white.

You select the other two colors, blue and orange, by turning the high-order bit (bit 7) of a data byte on (1). The colored dots controlled by a byte with the high-order bit on are either blue or orange: the dots in even-numbered columns are blue, and the dots in odd-numbered columns are orange—again, only if the dots on both sides are black. Within each horizontal line of seven dots controlled by a single byte, you can have black, white, and one pair of colors. To change the color of any dot to one of the other pair of colors, you must change the high-order bit of its byte, which affects the colors of all seven dots controlled by the byte.

For more details about the way the Apple IIe produces color on a TV set, see the section "Video Display Modes" in Chapter 7.

In other words, high-resolution graphics displayed on a color monitor or television set are made up of colored dots, according to the following rules:

- Dots in even columns can be black, purple, or blue.
- Dots in odd columns can be black, green, or orange.
- If adjacent dots in a row are both on, they are both white.
- The colors in each row of seven dots controlled by a single byte are either purple and green, or blue and orange, depending on whether the high-order bit is off (0) or on (1).

These rules are summarized in Table 2-6. The blacks and whites are numbered to remind you that the high-order bit is different.

Table 2-6
High-resolution graphics colors

Bits 0–6	Bit 7 off	Bit 7 on
Adjacent columns off	Black 1	Black 2
Even columns on	Purple	Blue
Odd columns on	Green	Orange
Adjacent columns on	White 1	White 2

Note: Colors may vary depending upon the controls on the monitor or television set.

For information about the way NTSC color television works, see the magazine articles listed in the bibliography.

The peculiar behavior of the high-resolution colors reflects the way NTSC color television works. The dots that make up the Apple IIe video signal are spaced to coincide with the frequency of the color subcarrier used in the NTSC system. Alternating black and white dots at this spacing cause a color monitor or TV set to produce color, but two or more white dots together do not. Effective horizontal resolution with color is 140 dots per line (280 divided by 2).

Double high-resolution graphics

In the double high-resolution graphics mode, the Apple IIe displays an array of colored dots 560 columns wide and 192 rows deep. There are 16 colors available for use with double high-resolution graphics (see Table 2-7).

Double high-resolution graphics is a bit-mapping of the low-order seven bits of the bytes in the main-memory and auxiliary-memory pages at $2000–$3FFF. The bytes in the main-memory and auxiliary-memory pages are interleaved in exactly the same manner as the characters in 80-column text: of each pair of identical addresses, the auxiliary-memory byte is displayed first, and the main-memory byte is displayed second. Horizontal resolution is 560 dots when displayed on a monochrome monitor.

Unlike high-resolution color, double high-resolution color has no restrictions on which colors can be adjacent. Color is determined by any four adjacent dots along a line. Think of a four-dot-wide window moving across the screen: at any given time, the color displayed will correspond to the four-bit value from Table 2-7 that corresponds to the window's position (Figure 2-10). Effective horizontal resolution with color is 140 (560 divided by 4) dots per line.

To use Table 2-7, divide the display column number by four, and use the remainder to find the correct column in the table: *ab0* is a byte residing in auxiliary memory corresponding to a remainder of zero (byte 0, 4, 8, and so on); *mb1* is a byte residing in main memory corresponding to a remainder of one (byte 1, 5, 9, and so on); and similarly for *ab3* and *mb4*.

Table 2-7
Double high-resolution graphics colors

Color	ab0	mb1	ab2	mb3	Repeated bit pattern
Black	$00	$00	$00	$00	0000
Magenta	$08	$11	$22	$44	0001
Brown	$44	$08	$11	$22	0010
Orange	$4C	$19	$33	$66	0011
Dark green	$22	$44	$08	$11	0100
Gray 1	$2A	$55	$2A	$55	0101
Green	$66	$4C	$19	$33	0110
Yellow	$6E	$5D	$3B	$77	0111
Dark blue	$11	$22	$44	$08	1000
Purple	$19	$33	$66	$4C	1001
Gray 2	$55	$2A	$55	$2A	1010
Pink	$5D	$3B	$77	$6E	1011
Medium blue	$33	$66	$4C	$19	1100
Light blue	$3B	$77	$6E	$5D	1101
Aqua	$77	$6E	$5D	$3B	1110
White	$7F	$7F	$7F	$7F	1111

Video display pages

The Apple IIe generates its video displays using data stored in specific areas in memory. These areas, called *display pages,* serve as buffers where your programs can put data to be displayed. Each byte in a display buffer controls an object at a certain location on the display. In text mode, the object is a single character; in low-resolution graphics, the object is two stacked colored blocks; and in high-resolution and double high-resolution modes, it is a line of seven adjacent dots.

The 40-column-text and low-resolution-graphics modes use two display pages of 1024 bytes each. These are called *text Page 1* and *text Page 2,* and they are located at 1024–2047 (hexadecimal $0400–$07FF) and 2048–3071 ($0800–$0BFF) in main memory. Normally, only Page 1 is used, but you can put text or graphics data into Page 2 and switch displays instantly. Either page can be displayed as 40-column text, low-resolution graphics, or mixed mode (four rows of text at the bottom of a graphics display).

The 80-column text mode displays twice as much data as the 40-column mode—1920 bytes—but it cannot switch pages. The 80-column text display uses a combination page made up of text Page 1 in main memory plus another page in auxiliary memory located on the 80-column text card. This additional memory is *not* the same as text Page 2—in fact, it occupies the same address space as text Page 1, and there is a special soft switch that enables you to store data into it. (See the next section, "Display Mode Switching.") The built-in firmware I/O routines, described in Chapter 3, take care of this extra addressing automatically; that is one reason to use those routines for all your normal text output.

The high-resolution graphics mode also has two display pages, but each page is 8192 bytes long. In the 40-column text and low-resolution graphics modes each byte controls a display area seven dots wide by eight dots high. In high-resolution graphics mode each byte controls an area seven dots wide by one dot high. Thus, a high-resolution display requires eight times as much data storage, as shown in Table 2-8.

The double high-resolution graphics mode uses high-resolution Page 1 in both main and auxiliary memory. Each byte in those pages of memory controls a display area seven dots wide by one dot high. This gives you 560 dots per line in black and white, and 140 dots per line in color. A double high-resolution display requires twice the total memory as high-resolution graphics, and 16 times as much as a low-resolution display.

Table 2-8
Video display page locations

Display mode	Display page	Lowest address Hex	Lowest address Dec	Highest address Hex	Highest address Dec
40-column text, low-resolution graphics	1	$0400	1024	$07FF	2047
	2*	$0800	2048	$0BFF	3071
80-column text	1	$0400	1024	$07FF	2047
	2*	$0800	2048	$0BFF	3071
High-resolution graphics	1	$2000	8192	$3FFF	16383
	2	$4000	16384	$5FFF	24575
Double high-resolution graphics	1†	$2000	8192	$3FFF	16383
	2†	$4000	16384	$5FFF	24575

* This is not supported by firmware; for instructions on how to switch pages, refer to the next section, "Display Mode Switching."
† See the section "Double High-Resolution Graphics" earlier in this chapter.

Display mode switching

You select the display mode that is appropriate for your application by reading or writing to a reserved memory location called a *soft switch*. In the Apple IIe, most soft switches have three memory locations reserved for them: one for turning the switch on, one for turning it off, and one for reading the current state of the switch.

Table 2-9 shows the reserved locations for the soft switches that control the display modes. For example, to switch from mixed-mode to full-screen graphics in an assembly-language program, you could use the instruction

```
STA     $C052
```

To do this in a BASIC program, you could use the instruction

```
POKE    49234,0
```

Some of the soft switches in Table 2-9 must be read, some must be written to, and for some you can use either action. When writing to a soft switch, it doesn't matter what value you write; the action occurs when you address the location, and the value is ignored.

Table 2-9
Display soft switches

Name	Action	Hex	Function
ALTCHAR	W	$C00E	Off: display text using primary character set
ALTCHAR	W	$C00F	On: display text using alternate character set
RDALTCHAR	R7	$C01E	Read ALTCHAR switch (1 = on)
80COL	W	$C00C	Off: display 40 columns
80COL	W	$C00D	On: display 80 columns
RD80COL	R7	$C01F	Read 80COL switch (1 = on)
80STORE	W	$C000	Off: cause PAGE2 on to select auxiliary RAM
80STORE	W	$C001	On: allow PAGE2 to switch main RAM areas
RD80STORE	R7	$C018	Read 80STORE switch (1 = on)
PAGE2	R/W	$C054	Off: select Page 1
PAGE2	R/W	$C055	On: select Page 2 or, if 80STORE on, Page 1 in auxiliary memory
RDPAGE2	R7	$C01C	Read PAGE2 switch (1 = on)
TEXT	R/W	$C050	Off: display graphics or, if MIXED on, mixed
TEXT	R/W	$C051	On: display text
RDTEXT	R7	$C01A	Read TEXT switch (1 = on)
MIXED	R/W	$C052	Off: display only text or only graphics
MIXED	R/W	$C053	On: if TEXT off, display text and graphics
RDMIXED	R7	$C01B	Read MIXED switch (1 = on)
HIRES	R/W	$C056	Off: if TEXT off, display low-resolution graphics

Table 2-9 (continued)
Display soft switches

Name	Action	Hex	Function
HIRES	R/W	$C057	On: if TEXT off, display high-resolution or, if DHIRES on, double high-resolution graphics
RDHIRES	R7	$C01D	Read HIRES switch (1 = on)
IOUDIS	W	$C07E	On: disable IOU access for addresses $C058 to $C05F; enable access to DHIRES switch*
IOUDIS	W	$C07F	Off: enable IOU access for addresses $C058 to $C05F; disable access to DHIRES switch*
RDIOUDIS	R7	$C07E	Read IOUDIS switch (1 = off)†
DHIRES	R/W	$C05E	On: if IOUDIS on, turn on double high resolution
DHIRES	R/W	$C05F	Off: if IOUDIS on, turn off double high resolution
RDDHIRES	R7	$C07F	Read DHIRES switch (1 = on)†
VBL	R7	$C091	Vertical blanking

Note: W means write anything to the location, *R* means read the location, *R/W* means read or write, and *R7* means read the location and check bit 7.
* The firmware normally leaves IOUDIS on. See also †.
† Reading or writing any address in the range $C070–$C07F also triggers the paddle timer and resets VBLINT (Chapter 7).

❖ *By the way:* You may not need to deal with these functions by reading and writing directly to the memory locations in Table 2-9. Many of the functions shown here are selected automatically if you use the display routines in the various high-level languages on the Apple IIe.

Any time you read a soft switch, you get a byte of data. However, the only information the byte contains is the state of the switch, and this occupies only one bit—bit 7, the high-order bit. The other bits in the byte are unpredictable. If you are programming in machine language, the switch setting is the sign bit; as soon as you read the byte, you can do a Branch Plus if the switch is off, or Branch Minus if the switch if on.

If you read a soft switch from a BASIC program, you get a value between 0 and 255. Bit 7 has a value of 128, so if the switch is on, the value will be equal to or greater than 128; if the switch is off, the value will be less than 128.

Addressing display pages directly

Before you decide to use the display pages directly, consider the alternatives. Most high-level languages enable you to write statements that control the text and graphics displays. Similarly, if you are programming in assembly language, you may be able to use the display features of the built-in I/O firmware. You should store directly into display memory only if the existing programs can't meet your requirements.

For a full description of the way the Apple IIe handles its display memory, refer to the section "Display Memory Addressing" in Chapter 7.

The display memory maps are shown in Figures 2-6, 2-7, 2-8, 2-9, and 2-10. All the different display modes use the same basic addressing scheme: characters or graphics bytes are stored as rows of 40 contiguous bytes, but the rows themselves are not stored at locations corresponding to their locations on the display. Instead, the display address is transformed so that three rows that are eight rows apart on the display are grouped together and stored in the first 120 locations of each block of 128 bytes ($80 hexadecimal). By folding the display data into memory this way, the Apple IIe, like the Apple II, stores all 960 characters of displayed text within 1K bytes of memory.

The high-resolution graphics display is stored in much the same way as text, but there are eight times as many bytes to store, because eight rows of dots occupy the same space on the display as one row of characters. The subset consisting of all the first rows from the groups of eight is stored in the first 1024 bytes of the high-resolution display page. The subset consisting of all the second rows from the groups of eight is stored in the second 1024 bytes, and so on for a total of 8 times 1024, or 8192 bytes. In other words, each block of 1024 bytes in the high-resolution display page contains one row of dots out of every group of eight rows. The individual rows are stored in sets of three 40-byte rows, the same way as the text display.

All of the display modes except 80-column mode and double high-resolution graphics mode can use either of two display pages. The display maps show addresses for each mode's Page 1 only. To obtain addresses for text or low-resolution graphics Page 2, add 1024 ($400); to obtain addresses for high-resolution Page 2, add 8192 ($2000).

The 80-column display and double high-resolution graphics mode work a little differently. Half of the data is stored in the normal text Page-1 memory, and the other half is stored in memory on the 80-column text card using the same addresses. The display circuitry fetches bytes from these two memory areas simultaneously and displays them sequentially: first the byte from the 80-column text card memory, then the byte from the main memory. The main memory stores the characters in the odd columns of the display, and the 80-column text card memory stores the characters in the even columns.

For more details about the way the displays are generated, see Chapter 7.

To store display data on the 80-column text card, first turn on the 80STORE soft switch by writing to location 49153 (hexadecimal $C001 or complementary –16383). With 80STORE on, the page-select switch, PAGE2, selects between the portion of the 80-column display stored in Page 1 of main memory and the portion stored in the 80-column text card memory. To select the 80-column text card, turn the PAGE2 soft switch on by reading or writing at location 49237.

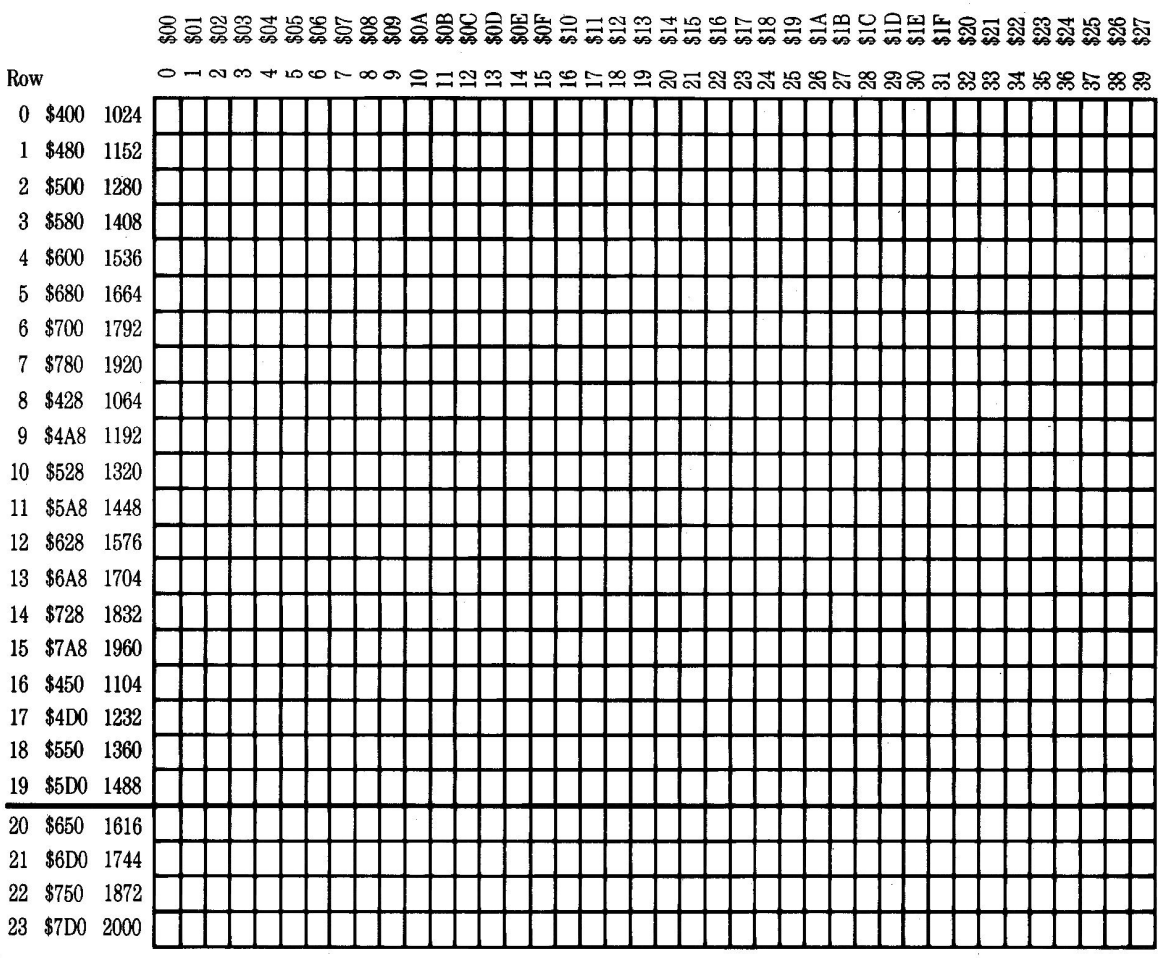

Figure 2-6
Map of 40-column text display

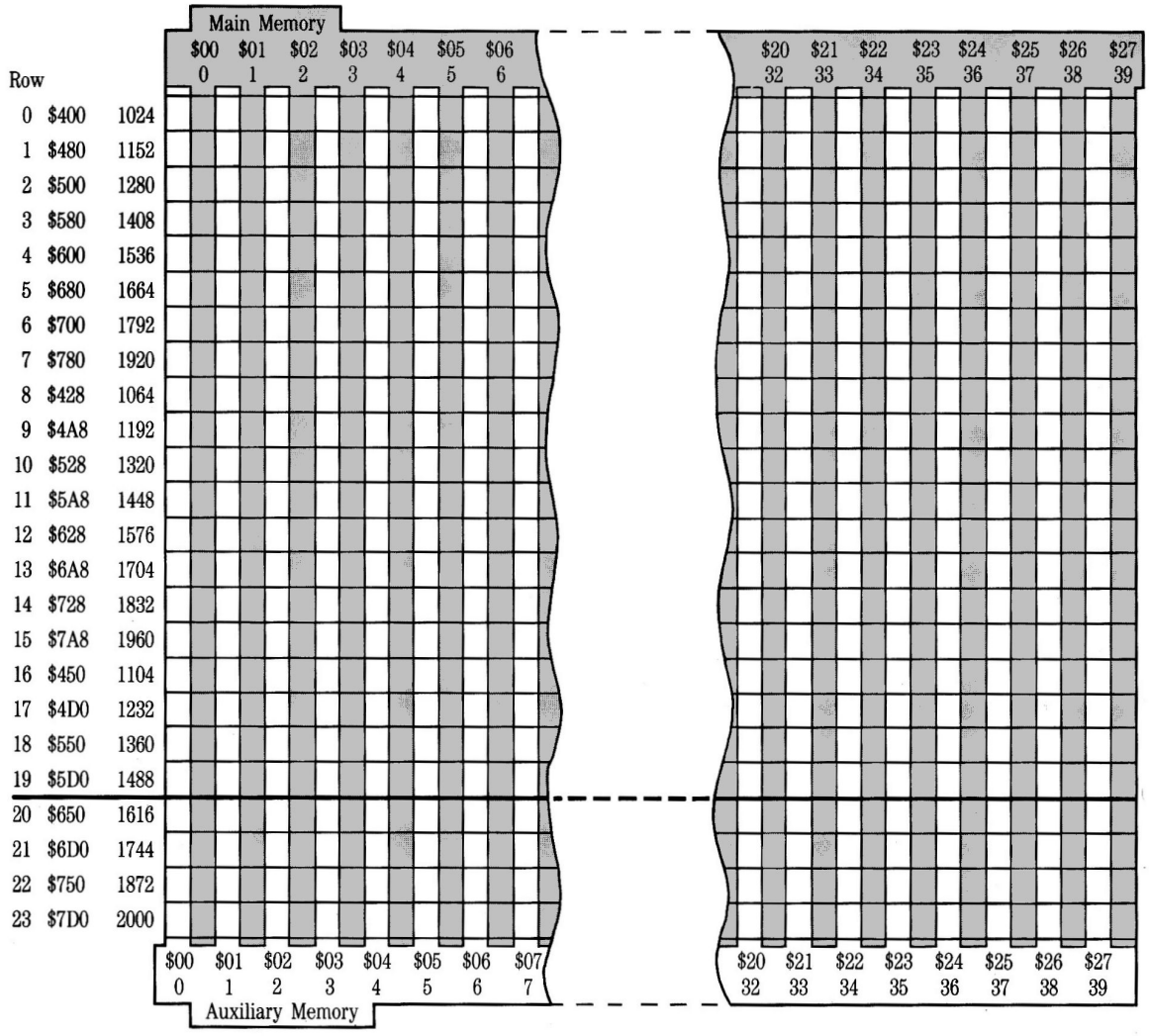

Figure 2-7
Map of 80-column text display

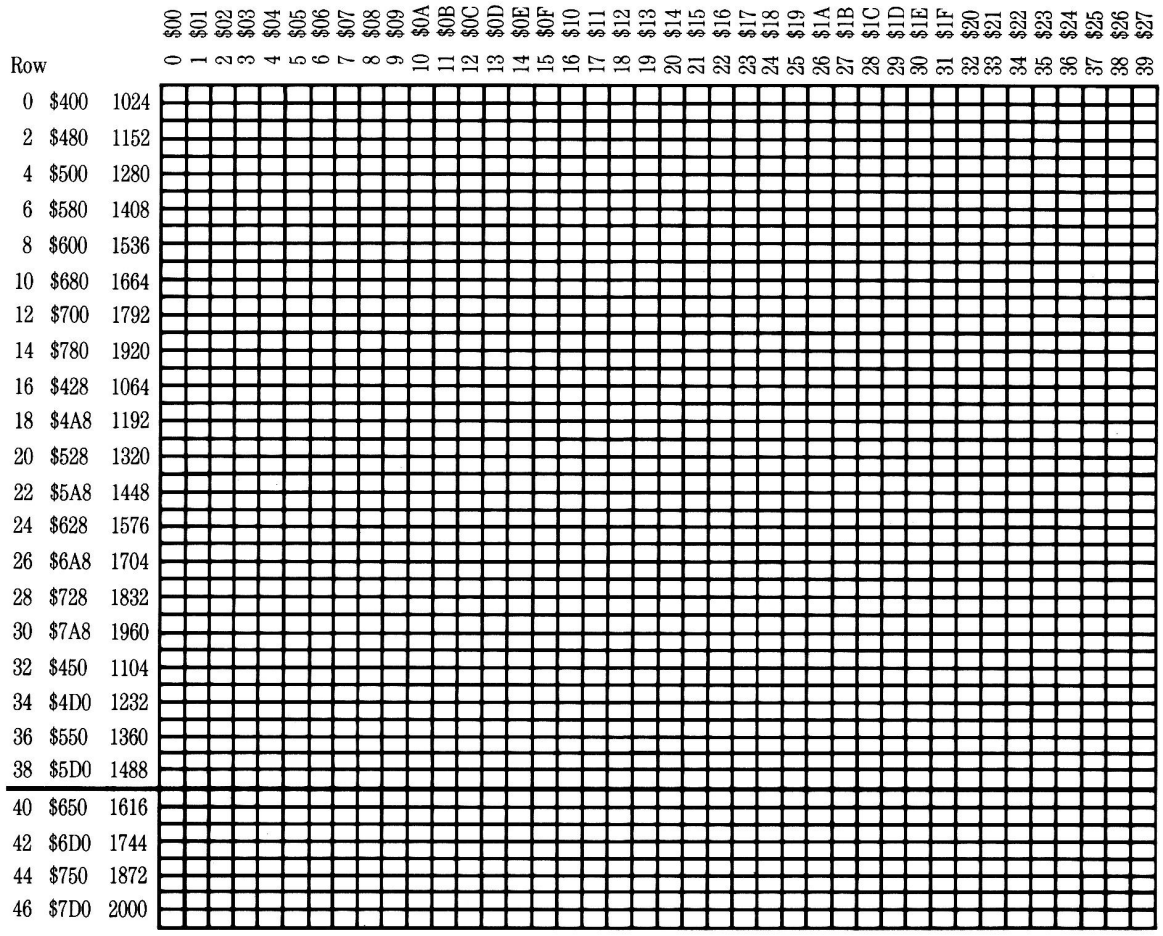

Figure 2-8
Map of low-resolution graphics display

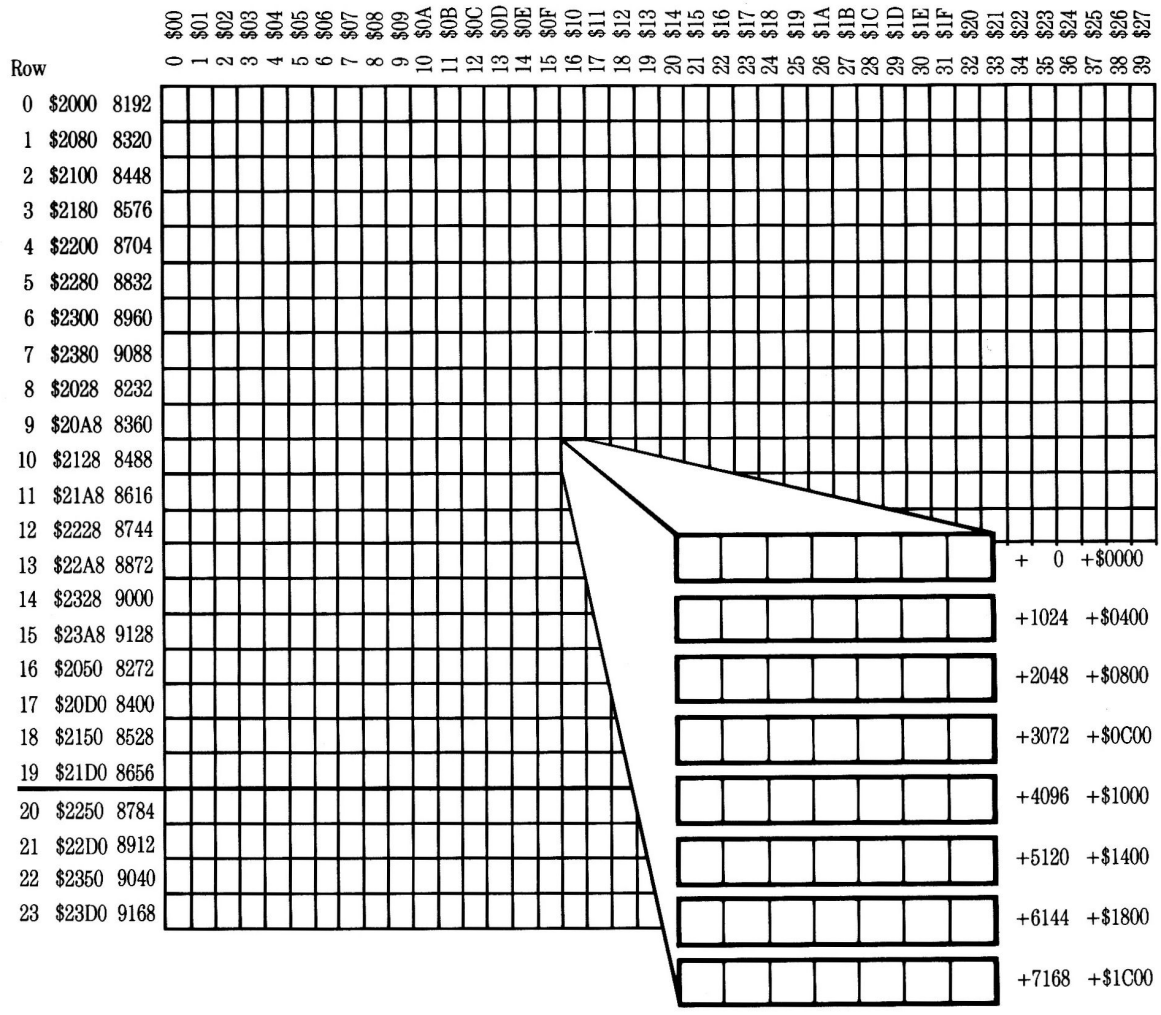

Figure 2-9
Map of high-resolution graphics display

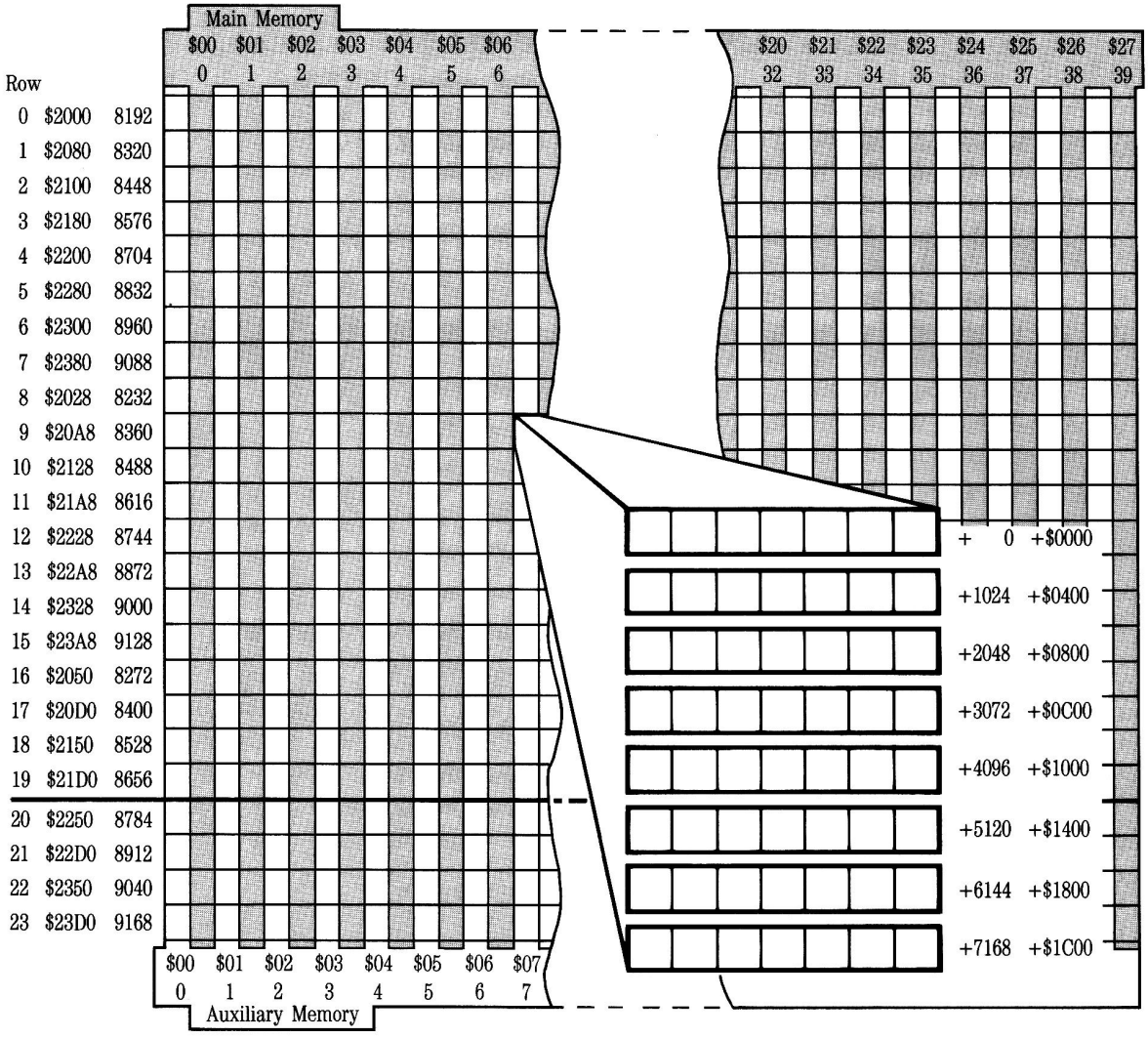

Figure 2-10
Map of double high-resolution graphics display

Secondary inputs and outputs

In addition to the primary I/O devices—the keyboard and display—there are several secondary input and output devices in the Apple IIe. These devices are

- the speaker (output)
- cassette input and output
- annunciator outputs
- strobe output
- switch inputs
- analog (hand control) inputs

These devices are similar in operation to the soft switches described in the preceding section: you control them by reading or writing to dedicated memory locations. Action takes place any time your program reads or writes to one of these locations; information written is ignored.

Important Some of these devices *toggle*—change state—each time they are accessed. If you write using an indexed store operation, the Apple IIe's microprocessor activates the address bus twice during successive clock cycles, causing a device that toggles each time it is addressed to end up back in its original state. For this reason, you should read, rather than write, to such devices.

The speaker

Electrical specifications of the speaker circuit appear in Chapter 7.

The Apple IIe has a small speaker mounted toward the front of the bottom plate. The speaker is connected to a soft switch that toggles; it has two states, off and on, and it changes from one to the other each time it is accessed. (At low frequencies, less than 400 Hz or so, the speaker clicks only on every other access.)

If you switch the speaker once, it emits a click; to make longer sounds, you access the speaker repeatedly. You should always use a read operation to toggle the speaker. If you write to this soft switch, it switches twice in rapid succession. The resulting pulse is so short that the speaker doesn't have time to respond; it doesn't make a sound.

The soft switch for the speaker uses memory location 49200 (hexadecimal $C030). From Integer BASIC, use the complementary address –16336. You can make various tones and buzzes with the speaker by using combinations of timing loops in your program. There is also a routine in the built-in firmware to make a beep through the speaker. This routine is named BELL1.

BELL1 is described in Appendix B.

Cassette input and output

There are two miniature phone jacks on the back panel of the Apple IIe. You can use a pair of standard cables with miniature phone plugs to connect an ordinary cassette tape recorder to the Apple IIe and save programs and data on audio cassettes.

The phone jack marked with a picture of an arrow pointing toward a cassette is the output jack. It's connected to a toggled soft switch, like the speaker switch described above. The signal at the phone jack switches from 0 to 25 millivolts or from 25 millivolts to 0 each time you access the soft switch.

Detailed electrical specifications for the cassette input and output are given in Chapter 7.

If you connect a cable from this jack to the microphone input of a cassette tape recorder and switch the recorder to record mode, the signal changes you produce by accessing this soft switch will be recorded on the tape. The cassette output switch uses memory location 49184 (hexadecimal $C020; complementary value –16352). Like the speaker, this output will toggle twice if you write to it, so you should only use read operations to control the cassette output.

The standard method for writing computer data on audio tapes uses tones with two different pitches to represent the binary states zero and one. To store data, you convert the data into a stream of bits and convert the bits into the appropriate tones. To save you the trouble of actually programming the tones, and to ensure consistency among all Apple II cassette tapes, there is a built-in routine named WRITE for producing cassette data output.

WRITE is described in Appendix B.

The phone jack marked with a picture of an arrow coming from a cassette is the input jack. It accepts a cable from the cassette recorder's earphone jack. The signal from the cassette is one volt (peak-to-peak) audio. Each time the instantaneous value of this audio signal changes from positive to negative, or vice versa, the state of the cassette input circuit changes from zero to one or vice versa. You can read the state of this circuit at memory location 49248 (hexadecimal $C060, or complementary decimal –16288).

When you read this location, you get a byte, but only the high-order bit (bit 7) is valid. If you are programming in machine language, this is the sign bit, so you can perform a Branch Plus or Branch Minus immediately after reading this byte. BASIC is too slow to keep up with the audio tones used for data recording on tape, but you don't need to write the program: there is a built-in routine named READ for reading data from a cassette.

READ is described in Appendix B.

The hand control connector signals

Several inputs and outputs are available on a 9-pin D-type miniature connector on the back of the Apple IIe: three one-bit inputs, or switches, and four analog inputs. These signals are also available on the 16-pin IC connector on the main circuit board, along with four one-bit outputs and a data strobe. You can access all of these signals from your programs.

Complete electrical specifications of these inputs and outputs are given in Chapter 7.

Ordinarily, you connect a pair of hand controls to the 9-pin connector. The rotary controls use two analog inputs, and the push-buttons use two one-bit inputs. However, you can also use these inputs and outputs for many other jobs. For example, two analog inputs can be used with a two-axis joystick. Table 7-19 shows the connector pin numbers.

Annunciator outputs

For electrical specifications of the annunciator outputs, refer to Chapter 7.

The four one-bit outputs are called *annunciators*. Each annunciator can be used to turn a lamp, a relay, or some similar electronic device on and off.

Each annunciator is controlled by a soft switch, and each switch uses a pair of memory locations. These memory locations are shown in Table 2-10. Any reference to the first location of a pair turns the corresponding annunciator off; a reference to the second location turns the annunciator on. There is no way to read the state of an annunciator.

Table 2-10
Annunciator memory locations

Annunciator			Address	
No.	Pin*	State	Decimal	Hex
0	15	Off	49240 –16296	$C058
		On	49241 –16295	$C059
1	14	Off	49242 –16294	$C05A
		On	49243 –16293	$C05B
2	13	Off	49244 –16292	$C05C
		On	49245 –16291	$C05D
3	12	Off	49246 –16290	$C05E
		On	49247 –16289	$C05F

* Pin numbers given are for the 16-pin IC connector on the circuit board.

Strobe output

The strobe output is normally at +5 volts, but it drops to zero for about half a microsecond any time its dedicated memory location is accessed. You can use this signal to control functions such as data latching in external devices. If you use this signal, remember that memory is addressed twice by a write; if you need only a single pulse, use a read operation to activate the strobe. The memory location for the strobe signal is 49216 (hexadecimal $C040 or complementary –16320).

Switch inputs

The three one-bit inputs can be connected to the output of another electronic device or to a pushbutton. When you read a byte from one of these locations, only the high-order bit—bit 7—is valid information; the rest of the byte is undefined. From machine language, you can do a Branch Plus or Branch Minus on the state of bit 7. From BASIC, you read the switch with a PEEK and compare the value with 128. If the value is 128 or greater, the switch is on.

The memory locations for these switches are 49249 through 49251 (hexadecimal $C061 through $C063, or complementary –16287 through –16285), as shown in Table 2-12. Switch 0 and switch 1 are permanently connected to the Open Apple and Solid Apple (or Option, on the extended keyboard IIe) keys on the keyboard; these are the ones normally connected to the buttons on the hand controls. Some software for the older models of the Apple II uses the third switch, switch 2, as a way of detecting the Shift key. This technique requires a hardware modification known as the single-wire Shift-key mod.

You should be sure that you really need the Shift-key mod before you go ahead and do it. It probably is not worth it unless you have a program that requires the Shift-key mod that you cannot either replace or modify to work without it.

Extended keyboard IIe

The extended keyboard IIe already has the single-wire Shift-key mod hardwired on the logic board.

Warning

If you make the Shift-key modification and connect a joystick or other hand control that uses switch 2, you must be careful never to close the switch and press Shift at the same time: doing so produces a short circuit that causes the power supply to turn off. When this happens, any programs or data in the computer's internal memory are lost.

- *Shift-key mod:* To perform this modification on your Apple IIe, all you have to do is solder across the broken diamond labeled X6 on the main circuit board. Remember to turn off the power before changing anything inside the Apple IIe. Also remember that changes such as this are at your own risk and may void your warranty.

Analog inputs

Refer to the section "Game I/O Signals" in Chapter 7 for details.

The four analog inputs are designed for use with 150K ohm variable resistors or potentiometers. The variable resistance is connected between the +5V supply and each input, so that it makes up part of a timing circuit. The circuit changes state when its time constant has elapsed, and the time constant varies as the resistance varies. Your program can measure this time by counting in a loop until the circuit changes state, or times out.

Before a program can read the analog inputs, it must first reset the timing circuits. Accessing memory location 49264 (hexadecimal $C070 or complementary –16272) does this. As soon as you reset the timing circuits, the high bits of the bytes at locations 49252 through 49255 (hexadecimal $C064 through $C067 or complementary –16284 through –16281) are set to 1. If you PEEK at them from BASIC, the values will be 128 or greater. Within about 3 milliseconds, these bits will change back to 0—byte values less than 128—and remain there until you reset the timing circuits again. The exact time each of the four bits remains high is directly proportional to the resistance connected to the corresponding input. If these inputs are open—no resistances are connected—the corresponding bits may remain high indefinitely.

PREAD is described in Appendix B.

To read the analog inputs from machine language, you can use a program loop that resets the timers and then increments a counter until the bit at the appropriate memory location changes to 0, or you can use the built-in routine named PREAD. High-level languages, such as BASIC, also include convenient means of reading the analog inputs: refer to your language manuals.

Summary of secondary I/O locations

Table 2-11 shows the memory locations for all of the built-in I/O devices except the keyboard and display. As explained earlier, some soft switches should only be accessed by means of read operations; those switches are marked.

Table 2-11
Secondary I/O memory locations

Function	Address		Access
	Decimal	Hex	
Speaker	49200 –16336	$C030	Read only
Cassette out	49184 –16352	$C020	Read only
Cassette in	49248 –16288	$C060	Read only
Annunciator 0 on	49241 –16295	$C059	
Annunciator 0 off	49240 –16296	$C058	
Annunciator 1 on	49243 –16293	$C05B	
Annunciator 1 off	49242 –16294	$C05A	
Annunciator 2 on	49245 –16291	$C05D	
Annunciator 2 off	49244 –16292	$C05C	
Annunciator 3 on	49247 –16289	$C05F	
Annunciator 3 off	49246 –16290	$C05E	
Strobe output	49216 –16320	$C040	Read only
Switch input 0 (Ö)	49249 –16287	$C061	Read only
Switch input 1 (Ô)	49250 –16286	$C062	Read only
Switch input 2	49251 –16285	$C063	Read only
Analog input reset	49264 –16272	$C070	
Analog input 0	49252 –16284	$C064	Read only
Analog input 1	49253 –16283	$C065	Read only
Analog input 2	49254 –16282	$C066	Read only
Analog input 3	49255 –16281	$C067	Read only

Note: For connector identification and pin numbers, refer to Tables 7-18 and 7-19.

Chapter 3

Built-in I/O Firmware

The **Monitor**, or System Monitor, is a computer program that is used to operate the computer at the machine-language level.

Almost every program on the Apple IIe takes input from the keyboard and sends output to the display. The **Monitor** and the Applesoft and Integer BASICs do this by means of standard I/O subroutines that are built into the Apple IIe's firmware. Many application programs also use the standard I/O subroutines, but Pascal programs do not; Pascal has its own I/O subroutines.

This chapter describes the features of these subroutines as they are used by the Monitor and by the BASIC interpreters, and tells you how to use the standard subroutines in your assembly-language programs.

Important High-level languages already include convenient methods for handling most of the functions described in this chapter. You should not need to use the standard I/O subroutines in your programs unless you are programming in assembly language.

Table 3-1
Monitor firmware routines

Location0	Name	Description
$C305	BASICIN	With 80-column firmware active, displays solid, blinking cursor; accepts character from keyboard
$C307	BASICOUT	Displays a character on the screen; used when the 80-column firmware is active (Chapter 3)
$FC9C	CLREOL	Clears to end of line from current cursor position
$FC9E	CLEOLZ	Clears to end of line using contents of Y register as cursor position
$FC42	CLREOP	Clears to bottom of window
$F832	CLRSCR	Clears the low-resolution screen
$F836	CLRTOP	Clears top 40 lines of low-resolution screen
$FDED	COUT	Calls output routine whose address is stored in CSW (normally COUT1, Chapter 3)
$FDF0	COUT1	Displays a character on the screen (Chapter 3)

Table 3-1 (continued)
Monitor firmware routines

Location0	Name	Description
$FD8E	CROUT	Generates a carriage return character
$FD8B	CROUT1	Clears to end of line, then generates a carriage return character
$FD6A	GETLN	Displays the prompt character; accepts a string of characters by means of RDKEY
$F819	HLINE	Draws a horizontal line of blocks
$FC58	HOME	Clears the window and puts cursor in upper-left corner of window
$FD1B	KEYIN	With 80-column firmware inactive, displays checkerboard cursor; accepts character from keyboard
$F800	PLOT	Plots a single low-resolution block on the screen
$F94A	PRBL2	Sends 1 to 256 blank spaces to the output device
$FDDA	PRBYTE	Prints a hexadecimal byte
$FF2D	PRERR	Sends ERR and Control-G to the output device
$FDE3	PRHEX	Prints 4 bits as a hexadecimal number
$F941	PRNTAX	Prints contents of A and X in hexadecimal
$FD0C	RDKEY	Displays blinking cursor; goes to standard input routine, normally KEYIN or BASICIN
$F871	SCRN	Reads color value of a low-resolution block
$F864	SETCOL	Sets the color for plotting in low resolution
$FC24	VTABZ	Sets cursor vertical position
$F828	VLINE	Draws a vertical line of low-resolution blocks

The standard I/O subroutines listed in Table 3-1 are fully described in this chapter. The Apple IIe firmware also contains many other subroutines that you might find useful. Those subroutines are described in Appendix B. Two of the built-in subroutines, AUXMOVE and XFER, can help you use the optional auxiliary memory.

AUXMOVE and XFER are described in the section "Auxiliary-Memory Subroutines" in Chapter 4.

Using the I/O subroutines

Before you use the standard I/O subroutines, you should understand a little about the way they are used. The Apple IIe firmware operates differently when an option such as an 80-column text card is used. This section describes general situations that affect the operation of the standard I/O subroutines. Specific instances are described in the sections devoted to the individual subroutines.

Apple II compatibility

Compared with older Apple II models, the Apple IIe has some additional keyboard and display features. To run programs that were written for the older models, you can make the Apple IIe resemble an Apple II Plus by turning those features off. The features that you can turn off and on to put the Apple IIe into and out of Apple II mode are listed in Table 3-2.

Table 3-2
Apple II mode

	Apple IIe	Apple II mode
Keyboard	Uppercase and lowercase	Uppercase only
Display characters	Inverse and normal only	Flashing, inverse, and normal
Display size	40-column; also 80-column with optional card	40-column only

If the Apple IIe does not have an 80-column text card installed in the auxiliary slot, it is almost in Apple II mode as soon as you turn it on or reset it. One exception is the keyboard, which is both uppercase and lowercase.

Original IIe

On an original Apple IIe, statements in Integer BASIC, Applesoft, and DOS 3.3 commands must be typed in uppercase letters. To be compatible with older software, you should switch the Apple IIe keyboard to uppercase by pressing Caps Lock.

Another feature on the Apple IIe that differs from the Apple II is the displayed character set. An Apple II displays only uppercase characters, but it displays them in three ways: normal, inverse, and flashing. The Apple IIe can display uppercase characters all three ways, and it can display lowercase characters in the normal way. This combination is called the *primary character set.* When the Apple IIe is first turned on or reset, it displays the primary character set.

The primary and alternate character sets are described in Chapter 2 in the section "Text Character Sets."

The Apple IIe has another character set, called the *alternate character set,* that displays a full set of normal and inverse characters, with the inverse uppercase characters between $40 and $5F replaced on enhanced Apple IIe's with MouseText characters.

Original IIe

In the original Apple IIe, uppercase inverse characters appear in place of the MouseText characters of the enhanced Apple IIe and the Apple IIc.

The ALTCHAR soft switch is described in Chapter 2.

You can switch character sets at any time by means of the ALTCHAR soft switch.

The 80-column firmware

There are a few features that are normally available only with the 80-column display. These features are identified in Table 3-3b and Table 3-6. The firmware that supports these features is built into the Apple IIe, but it is normally active only if an 80-column text card is installed in the auxiliary slot.

When you turn on power or reset the Apple IIe, the 80-column firmware is inactive and the Apple IIe displays the primary character set, even if an 80-column text card is installed. When you activate the 80-column firmware, it switches to the alternate character set.

The built-in 80-column firmware is implemented as if it were installed in expansion slot 3. Programs written for an Apple II or Apple II Plus with an 80-column text card installed in slot 3 usually will run properly on a Apple IIe with an 80-column text card in the auxiliary slot.

See the section "Switching I/O Memory" in Chapter 6 for details.

If the Apple IIe has an 80-column text card and you want to use the 80-column display, you can activate the built-in firmware from BASIC by typing `PR#3`.

To activate the 80-column firmware from the Monitor, press 3, then Control-P. Notice that this is the same procedure you use to activate a card in expansion slot 3. Any card installed in the auxiliary slot takes precedence over a card installed in expansion slot 3.

Important Even though you activated the 80-column firmware by typing `PR#3`, you should never deactivate it by typing `PR#0`, because that just disconnects the firmware, leaving several soft switches still set for 80-column operation. Instead, press the sequence Escape-Q (see Table 3-6).

If there is no 80-column text card or other auxiliary memory card in your Apple IIe, you can still activate the 80-column firmware and use it with a 40-column display. First, set the SLOTC3ROM soft switch located at $C00A (49162). Then type `PR#3` to transfer control to the firmware.

SLOTC3ROM is described in Chapter 6 in the section "Switching I/O Memory."

When the 80-column firmware is active without a card in the auxiliary slot, it does not work quite the same as it does with a card. The functions that clear the display (CLREOL, CLEOLZ, CLREOP, and HOME) work as if the firmware were inactive: they always clear to the current color. In addition, interrupts are supported only with a card installed in the auxiliary slot.

For more information about interrupts, see Chapter 6.

Warning If you do not have an interface card in either the auxiliary slot or slot 3, don't try to activate the firmware with `PR#3`. Typing `PR#3` with no card installed transfers control to the empty connector, with unpredictable results.

Programs activate the 80-column firmware by transferring control to address $C300. If there is no card in the auxiliary slot, you must set the SLOTC3ROM soft switch first. To deactivate the 80-column firmware from a program, write a Control-U character via subroutine COUT.

The old monitor

Apple II's and Apple II Pluses used a version of the System Monitor different from the one the Apple IIe uses. It had the same standard I/O subroutines, but a few of the features were different; for example, there were no arrow keys for cursor motion. If you start the Apple IIe with a DOS or BASIC disk that loads Integer BASIC into the bank-switched area in RAM, the old Monitor (sometimes called the *Autostart Monitor*) is also loaded with it. When you type `INT` from Applesoft to activate Integer BASIC, you also activate this copy of the old Monitor, which remains active until you either type `FP` to switch back to Applesoft, which uses the new Monitor in ROM, or type `PR#3` to activate the 80-column firmware. Part of the firmware's initialization procedure checks to see which version of the Monitor is in RAM. If it finds the old Monitor, it replaces it with a copy of the new Monitor from ROM. After the firmware has copied the new Monitor into RAM, it remains there until the next time you start up the system.

The standard I/O links

When you call one of the character I/O subroutines (COUT and RDKEY), the first thing that happens is an indirect jump to an address stored in programmable memory. Memory locations used for transferring control to other subroutines are sometimes called *vectors;* in this manual, the locations used for transferring control to the I/O subroutines are called **I/O links.** In a Apple IIe running without a disk operating system, each I/O link is normally the address of the body of the subroutine (COUT1 or KEYIN). If a disk operating system is running, one or both of these links hold the addresses of the corresponding DOS or ProDOS I/O routines instead. (DOS and ProDOS maintain their own links to the standard I/O subroutines.)

For more information about the **I/O links,** see the section "Changing the Standard I/O Links" in Chapter 6.

By calling the I/O subroutines that jump to the link addresses instead of calling the standard subroutines directly, you ensure that your program will work properly in conjunction with other software, such as DOS or a printer driver, that changes one or both of the I/O links.

For the purposes of this chapter, we shall assume that the I/O links contain the addresses of the standard I/O subroutines—COUT1 and KEYIN if the 80-column firmware is off, and BASICOUT and BASICIN if it is on.

Standard output features

The standard output routine is named COUT, pronounced "C-out," which stands for *character out.* COUT normally calls COUT1, which sends one character to the display, advances the cursor position, and scrolls the display when necessary. COUT1 restricts its use of the display to an active area called the *text window,* described below.

COUT output subroutine

Your program makes a subroutine call to COUT at memory location $FDED with a character in the accumulator. COUT then passes control via the output link CSW to the current output subroutine, normally COUT1 (or BASICOUT), which takes the character in the accumulator and writes it out. If the accumulator contains an uppercase or lowercase letter, a number, or a special character, COUT1 displays it; if the accumulator contains a control character, COUT1 either performs one of the special functions described below or ignores the character.

Each time you send a character to COUT1, it displays the character at the current cursor position, replacing whatever was there, and then advances the cursor position one space to the right. If the cursor position is already at the right edge of the window, COUT1 moves it to the leftmost position on the next line down. If this would move the cursor position past the end of the last line in the window, COUT1 scrolls the display up one line and sets the cursor position at the left end of the new bottom line.

The cursor position is controlled by the values in memory locations 36 and 37 (hexadecimal $24 and $25). These locations are named CH, for cursor horizontal, and CV, for cursor vertical. COUT1 does not display a cursor, but the input routines described below do, and they use this cursor position. If some other routine displays a cursor, it will not necessarily put it in the cursor position used by COUT1.

Control characters with COUT1 and BASICOUT

COUT1 and BASICOUT do not display control characters. Instead, the control characters listed in Tables 3-3a and 3-3b are used to initiate some action by the firmware. Other control characters are ignored. Most of the functions listed here can also be invoked from the keyboard, either by typing the control character listed or by using the appropriate escape code, as described in the section "Escape Codes With KEYIN and BASICIN" later in this chapter. The stop-list function, described separately, can only be invoked from the keyboard.

Table 3-3a
Control characters, 80-column firmware off

Control character	ASCII name	Apple IIe name	Action taken by COUT1
Control-G	BEL	Bell	Produces a 1000 Hz tone for 0.1 second
Control-H	BS	Backspace	Moves cursor position one space to the left; from left edge of window, moves to right end of line above
Control-J	LF	Line feed	Moves cursor position down to next line in window, scrolls if needed
Control-M	CR	Return	Moves cursor position to left end of next line in window, scrolls if needed

Table 3-3b
Control characters, 80-column firmware on

Control character	ASCII name	Apple IIe name	Action taken by BASICOUT
Control-G	BEL	Bell	Produces a 1000 Hz tone for 0.1 second
Control-H	BS	Backspace	Moves cursor position one space to the left; from left edge of window, moves to right end of line above

Table 3-3b (continued)
Control characters, 80-column firmware on

Control character	ASCII name	Apple IIe name	Action taken by BASICOUT
Control-J	LF	Line feed	Moves cursor position down to next line in window; scrolls if needed
Control-K*	VT	Clear EOS	Clears from cursor position to the end of the screen
Control-L*	FF	Home and clear	Moves cursor position to upper-left corner of window and clears window
Control-M	CR	Return	Moves cursor position to left end of next line in window, scrolls if needed
Control-N*	SO	Normal	Sets display format normal
Control-O*	SI	Inverse	Sets display format inverse
Control-Q*	DC1	40-column	Sets display to 40-column
Control-R*	DC2	80-column	Sets display to 80-column
Control-S†	DC3	Stop-list	Stops listing characters on the display until another key is pressed
Control-U*	NAK	Quit	Deactivates 80-column video firmware
Control-V*	SYN	Scroll	Scrolls the display down one line, leaving the cursor in the current position
Control-W*	ETB	Scroll-up	Scrolls the display up one line, leaving the cursor in the current position
Control-X	CAN	Disable MouseText	Disables MouseText character display; use inverse uppercase

Table 3-3b (continued)
Control characters, 80-column firmware on

Control character	ASCII name	Apple IIe name	Action taken by BASICOUT
Control-Y*	EM	Home	Moves cursor position to upper-left corner of window (but doesn't clear)
Control-Z*	SUB	Clear line	Clears the line the cursor position is on
Control-[	ESC	Enable MouseText	Maps inverse uppercase characters to MouseText characters
Control-*	FS	Forward space	Moves cursor position one space to the right, from right edge of window, moves it to left end of line below
Control-]*	GS	Clear EOL	Clears from the current cursor position to the end of the line (that is, to the right edge of the window)
Control-_	US	Up	Moves cursor up a line, no scroll

* Doesn't work from the keyboard
† Only works from the keyboard

The stop-list feature

When you are using any program that displays text via COUT1 (or BASICOUT), you can make it stop updating the display by holding down Control and pressing S. Whenever COUT1 gets a carriage return from the program, it checks to see if you have pressed Control-S. If you have, COUT1 stops and waits for you to press another key. When you want COUT1 to resume, press another key; COUT1 will send the carriage return it got earlier to the display, then continue normally. The character code of the key you pressed to resume displaying is ignored unless you pressed Control-C. COUT1 passes Control-C back to the program; if it is a BASIC program, this enables you to terminate the program while in stop-list mode.

The text window

After starting up the computer or after a reset, the firmware uses the entire display. However, you can restrict video activity to any rectangular portion of the display you wish. The active portion of the display is called the *text window*. COUT1 or BASICOUT puts characters into the window only; when it reaches the end of the last line in the window, it scrolls only the contents of the window.

You can set the top, bottom, left side, and width of the text window by storing the appropriate values into four locations in memory. This enables your programs to control the placement of text in the display and to protect other portions of the screen from being written over by new text.

Memory location 32 (hexadecimal $20) contains the number of the leftmost column in the text window. This number is normally 0, the number of the leftmost column in the display. In a 40-column display, the maximum value for this number is 39 (hexadecimal $27); in an 80-column display, the maximum value is 79 (hexadecimal $4F).

Memory location 33 (hexadecimal $21) holds the width of the text window. For a 40-column display, it is normally 40 (hexadecimal $28); for an 80-column display, it is normally 80 (hexadecimal $50).

Original IIe COUT1 truncates the column width to an even value on the original Apple IIe.

Warning On an original Apple IIe, be careful not to let the sum of the window width and the leftmost position in the window exceed the width of the display you are using (40 or 80). If this happens, it is possible for COUT1 to put characters into memory locations outside the display page, possibly into your current program or data space.

Memory location 34 (hexadecimal $22) contains the number of the top line of the text window. This is normally 0, the topmost line in the display. Its maximum value is 23 (hexadecimal $17).

Memory location 35 (hexadecimal $23) contains the number of the bottom line of the screen, plus 1. It is normally 24 (hexadecimal $18) for the bottom line of the display. Its minimum value is 1.

After you have changed the text window boundaries, nothing is affected until you send a character to the screen.

Warning Any time you change the boundaries of the text window, you should make sure that the current cursor position (stored at CH and CV) is inside the new window. If it is outside, it is possible for COUT1 to put characters into memory locations outside the display page, possibly destroying programs or data.

Table 3-4 summarizes the memory locations and the possible values for the window parameters.

Table 3-4
Text window memory locations

Window parameter	Location		Minimum value		Normal values				Maximum values			
					40 col.		80 col.		40 col.		80 col.	
	Dec	Hex	Dec	Hex	Dec	Hex	Dec	Hex	Dec	Hex	Dec	Hex
Left edge	32	$20	00	$00	00	$00	00	$00	39	$27	79	$4F
Width	33	$21	00	$00	40	$28	80	$50	40	$28	80	$50
Top edge	34	$22	00	$00	00	$00	00	$00	23	$17	23	$17
Bottom edge	35	$23	01	$01	24	$18	24	$18	24	$18	24	$18

Table 3-5
Text format control values

Mask value		
Dec	Hex	Display format
255	$FF	Normal, uppercase, and lowercase
127	$7F	Flashing, uppercase, and symbols
63	$3F	Inverse, uppercase, and lowercase

Note: These mask values apply only to the primary character set (see text).

Inverse and flashing text

Subroutine COUT1 can display text in normal format, inverse format, or, with some restrictions, flashing format. The display format for any character in the display depends on two things: the character set being used at the moment, and the setting of the two high-order bits of the character's byte in the display memory.

As it sends your text characters to the display, COUT1 sets the high-order bits according to the value stored at memory location 50 (hexadecimal $32). If that value is 255 (hexadecimal $FF), COUT1 sets the characters to display in normal format; if the value is 63 (hexadecimal $3F), COUT1 sets the characters to inverse format. If the value is 127 (hexadecimal $7F) and if you have selected the primary character set, the characters will be displayed in flashing format. Note that flashing format is not available in the alternate character set.

To control the display format of the characters, routine COUT1 uses the value at location 50 as a logical mask to force the setting of the two high-order bits of each character byte it puts into the display page. It does this by performing the logical AND function on the data byte and the mask byte. The result byte contains a 0 in any bit that was 0 in the mask. BASICOUT, used when the 80-column firmware is active, changes only the high-order bit of the data.

Important If the 80-column firmware is inactive and you store a mask value at location 50 with zeros in its low-order bits, COUT1 will mask out those bits in your text. As a result, some characters will be transformed into other characters. You should set the mask to the values given in Table 3-5 only.

If you set the mask value at location 50 to 127 (hexadecimal $7F), the high-order bit of each result byte will be 0, and the characters will be displayed either as lowercase or as flashing, depending on which character set you have selected. Refer to the tables of display character sets in Chapter 2. In the primary character set, the next-highest bit, bit 6, selects flashing format with uppercase characters. With the primary character set you can display lowercase characters in normal format and uppercase characters in normal, inverse, and flashing formats. In the alternate character set, bit 6 selects lowercase or special characters. With the alternate character set you can display uppercase and lowercase characters in normal and inverse formats.

Switching between character sets is described in the section "Display Mode Switching" in Chapter 2.

Original IIe On the original Apple IIe, the MouseText characters are replaced by uppercase inverse characters.

Standard input features

The Apple IIe's firmware includes two different subroutines for reading from the keyboard. One subroutine is named RDKEY, which stands for *read key*. It calls the standard character input subroutine KEYIN (or BASICIN when the 80-column firmware in active), which accepts one character at a time from the keyboard.

For more information on GETLN, see the section "Editing With GETLN" later in this chapter.

The other subroutine is named GETLN, which stands for *get line*. By making repeated calls to RDKEY, GETLN accepts a sequence of characters terminated with a carriage return. GETLN also provides on-screen editing features.

RDKEY input subroutine

A program gets a character from the keyboard by making a subroutine call to RDKEY at memory location $FD0C. RDKEY sets the character at the cursor position to flash, then passes control via the input link KSW to the current input subroutine, which is normally KEYIN or BASICIN.

RDKEY displays a cursor at the current cursor position, which is immediately to the right of whatever character you last sent to the display (normally by using the COUT routine, described earlier). The cursor displayed by RDKEY is a flashing version of whatever character happens to be at that position on the screen. It is usually a space, so the cursor appears as a blinking rectangle.

KEYIN input subroutine

KEYIN is the standard input subroutine when the 80-column firmware is inactive; BASICIN is used when the 80-column firmware is active. When called, the subroutine waits until the user presses a key, then returns with the key code in the accumulator.

If the 80-column firmware is inactive, KEYIN displays a cursor by alternately storing a checkerboard block in the cursor location, then storing the original character, then the checkerboard again. If the firmware is active, BASICIN displays a steady inverse space (rectangle), unless you are in escape mode, when it displays a plus sign (+) in inverse format.

Escape mode is described in the next section, "Escape Codes."

KEYIN also generates a random number. While it is waiting for the user to press a key, KEYIN repeatedly increments the 16-bit number in memory locations 78 and 79 (hexadecimal $4E and $4F). This number keeps increasing from 0 to 65535, then starts over again at 0. The value of this number changes so rapidly that there is no way to predict what it will be after a key is pressed. A program that reads from the keyboard can use this value as a random number or as a seed for a random-number routine.

When the user presses a key, KEYIN accepts the character, stops displaying the cursor, and returns to the calling program with the character in the accumulator.

Escape codes with KEYIN and BASICIN

KEYIN has special functions that you invoke by typing escape codes on the keyboard. An escape code is obtained by pressing Escape, releasing it, and then pressing some other key. See Table 3-6; the notation in the table means press Escape, release it, then press the key that follows.

Table 3-6 includes three sets of cursor-control keys. The first set consists of Escape followed by A, B, C, or D. The letter keys can be either uppercase or lowercase. These keys are the standard cursor-motion keys on older Apple II models; they are present on the Apple IIe primarily for compatability with programs written for old machines.

Cursor motion in escape mode

The second and third sets of cursor-control keys are listed together because they activate escape mode. In escape mode, you can keep using the cursor-motion keys without pressing Escape again. This enables you to perform repeated cursor moves by holding down the appropriate key.

When the 80-column firmware is active, you can tell when BASICIN is in escape mode: it displays a plus sign in inverse format as the cursor. You leave escape mode by typing any key other than a cursor-motion key.

The escape codes with the directional arrow keys are the standard cursor-motion keys on the Apple IIe. The escape codes with the I, J, K, and M keys are the standard cursor-motion keys on the Apple II Plus, and are present on the Apple IIe for compatability with the Apple II Plus. On the Apple IIe, the escape codes with the I, J, K, and M keys function with either uppercase or lowercase letters.

Table 3-6
Escape codes

Escape code	Function
Escape @	Clears window and homes cursor (places it in upper-left corner of screen), then exits from escape mode
Escape A or a	Moves cursor right one line; exits from escape mode
Escape B or b	Moves cursor left one line; exits from escape mode

Table 3-6 (continued)
Escape codes

Escape code	Function
Escape C or c	Moves cursor down one line; exits from escape mode
Escape D or d	Moves cursor up one line; exits from escape mode
Escape E or e	Clears to end of line; exits from escape mode
Escape F or f	Clears to bottom of window; exits from escape mode
Escape I or i *or* Escape Up Arrow	Moves the cursor up one line; remains in escape mode (see text)
Escape J or j *or* Escape Left Arrow	Moves the cursor left one space; remains in escape mode (see text)
Escape K or k *or* Escape Right Arrow	Moves the cursor right one space; remains in escape mode (see text)
Escape M or m *or* Escape Down Arrow	Moves the cursor down one line; remains in escape mode (see text)
Escape 4	If 80-column firmware is active, switches to 40-column mode; sets links to BASICIN and BASICOUT; restores normal window size; exits from escape mode
Escape 8	If 80-column firmware is active, switches to 80-column mode; sets links to BASICIN and BASICOUT; restores normal window size; exits from escape mode
Escape Control-D	Disables control characters; only carriage return, line feed, BELL, and backspace have an effect when printed
Escape Control-E	Reactivates control characters
Escape Control-Q	If 80-column firmware is active, deactivates 80-column firmware; sets links to KEYIN and COUT1; restores normal window size; exits from escape mode

GETLN input subroutine

Programs often need strings of characters as input. While it is possible to call RDKEY repeatedly to get several characters from the keyboard, there is a more powerful subroutine you can use. This routine is named GETLN, which stands for *get line,* and it starts at location $FD6A. Using repeated calls to RDKEY, GETLN accepts characters from the standard input subroutine—usually KEYIN—and puts them into the input buffer located in the memory page from $200 to $2FF. GETLN also provides the user with on-screen editing and control features, described in the next section, "Editing With GETLN."

The first thing GETLN does when you call it is display a prompting character, called simply a **prompt.** The prompt indicates to the user that the program is waiting for input. Different programs use different prompt characters, helping to remind the user which program is requesting the input. For example, an INPUT statement in a BASIC program displays a question mark (?) as a prompt. The prompt characters used by the different programs on the Apple IIe are shown in Table 3-7.

GETLN uses the character stored at memory location 51 (hexadecimal $33) as the prompt character. In an assembly-language program, you can change the prompt to any character you wish. In BASIC, changing the prompt character has no effect, because both BASIC interpreters and the Monitor restore it each time they request input from the user.

Table 3-7
Prompt characters

Prompt character	Program requesting input
?	User's BASIC program (INPUT statement)
]	Applesoft BASIC (Appendix D)
>	Integer BASIC (Appendix D)
*	Firmware Monitor (Chapter 5)

As you type the character string, GETLN sends each character to the standard output routine—normally COUT1—which displays it at the previous cursor position and puts the cursor at the next available position on the display, usually immediately to the right. As the cursor travels across the display, it indicates the position where the next character will be displayed.

GETLN stores the characters in its buffer, starting at memory location $200 and using the X register to index the buffer. GETLN continues to accept and display characters until you press Return; then it clears the remainder of the line the cursor is on, stores the carriage-return code in the buffer, sends the carriage-return code to the display, and returns to the calling program.

The maximum line length that GETLN can handle is 255 characters. If the user types more than this, GETLN sends a backslash (\) and a carriage return to the display, cancels the line it has accepted so far, and starts over. To warn the user that the line is getting full, GETLN sounds a bell (tone) at every keypress after the 248th.

Important In the Apple II and the Apple II Plus, the GETLN routine converts all inputs to uppercase. GETLN in the Apple IIe does not do this, even in Apple II mode. To get uppercase input for BASIC, use Caps Lock.

Editing with GETLN

Subroutine GETLN provides the standard on-screen editing features used by the BASIC interpreters and the Monitor. For an introduction to editing with these features, refer to the *Applesoft Tutorial.* Any program that uses GETLN for reading the keyboard has these features.

Cancel line

Any time you are typing a line, pressing Control-X causes GETLN to cancel the line. GETLN displays a backslash (\) and issues a carriage return, then displays the prompt and waits for you to type a new line. GETLN takes the same action when you type more than 255 characters, as described earlier.

Backspace

When you press Left Arrow, GETLN moves its buffer pointer back one space, effectively deleting the last character in its buffer. It also sends a backspace character to routine COUT, which moves the display position and the cursor back one space. If you type another character now, it will replace the character you backspaced over, both on the display and in the line buffer. Each time you press Left Arrow, it moves the cursor left and deletes another character, until you reach the beginning of the line. If you then press Left Arrow one more time, you have cancelled the line, and GETLN issues a carriage return and displays the prompt.

Retype

Right Arrow has a function complementary to the backspace function. When you press Right Arrow, GETLN picks up the character at the display position just as if it had been typed on the keyboard. You can use this procedure to pick up characters that you have just deleted by backspacing across them. You can use the backspace and retype functions with the cursor-motion functions to edit data on the display. (See the earlier section "Cursor Motion in Escape Mode.")

Monitor firmware support

Table 3-8 summarizes the addresses and functions of the video display support routines the Monitor provides. These routines are described in the subsections that follow.

Table 3-8
Video firmware routines

Location	Name	Description
$C307	BASICOUT	Displays a character on the screen when 80-column firmware is active
$FC9C	CLREOL	Clears to end of line from current cursor position
$FC9E	CLEOLZ	Clears to end of line using contents of Y register as cursor position
$FC42	CLREOP	Clears to bottom of window
$F832	CLRSCR	Clears the low-resolution screen
$F836	CLRTOP	Clears top 40 lines of low-resolution screen
$FDED	COUT	Calls output routine whose address is stored in CSW (normally COUT1, Chapter 3)
$FDF0	COUT1	Displays a character on the screen (Chapter 3)
$FD8E	CROUT	Generates a carriage return character
$FD8B	CROUT1	Clears to end of line, then generates a carriage return character

Table 3-8 (continued)
Video firmware routines

Location	Name	Description
$F819	HLINE	Draws a horizontal line of blocks
$FC58	HOME	Clears the window and puts cursor in upper-left corner of window
$F800	PLOT	Plots a single low-resolution block on the screen
$F94A	PRBL2	Sends 1 to 256 blank spaces to the output device whose address is in CSW
$FDDA	PRBYTE	Prints a hexadecimal byte
$FF2D	PRERR	Sends ERR and Control-G to the output device whose output routine address is in CSW
$FDE3	PRHEX	Prints 4 bits as a hexadecimal number
$F941	PRNTAX	Prints contents of A and X in hexadecimal
$F871	SCRN	Reads color value of a low-resolution block on the screen
$F864	SETCOL	Sets the color for plotting in low resolution
$FC24	VTABZ	Sets cursor vertical position (Setting CV at location $25 does not change vertical positon until a carriage return.)
$F828	VLINE	Draws a vertical line of low-resolution blocks

BASICOUT, $C307

BASICOUT is essentially the same as COUT1—BASICOUT is used instead of COUT1 when the 80-column firmware is active. BASICOUT displays the character in the accumulator on the display screen at the current cursor position and advances the cursor. It places the character using the setting of the inverse mask (location $32). BASICOUT handles control characters; see Table 3-3b. When it returns control to the calling program, all registers are intact.

CLREOL, $FC9C

CLREOL clears a text line from the cursor position to the right edge of the window. This routine destroys the contents of A and Y.

CLEOLZ, $FC9E

CLEOLZ clears a text line to the right edge of the window, starting at the location given by base address BASL, which is indexed by the contents of the Y register. This routine destroys the contents of A and Y.

CLREOP, $FC42

CLREOP clears the text window from the cursor position to the bottom of the window. This routine destroys the contents of A and Y.

CLRSCR, $F832

CLRSCR clears the low-resolution graphics display to black. If you call this routine while the video display is in text mode, it fills the screen with inverse-mode at-sign (@) characters. This routine destroys the contents of A and Y.

CLRTOP, $F836

CLRTOP is the same as CLRSCR, except that it clears only the top 40 rows of the low-resolution display.

COUT, $FDED

COUT calls the current character output subroutine. (See the section "COUT Output Subroutine" earlier in this chapter.) The character to be sent to the output device should be in the accumulator. COUT calls the subroutine whose address is stored in CSW (locations $36 and $37), which is usually the standard character output subroutine COUT1 (or BASICOUT).

COUT1, $FDF0

See the section "Control Characters With COUT1 and BASICOUT" earlier in this chapter for more information on COUT1.

COUT1 displays the character in the accumulator on the display screen at the current cursor position and advances the cursor. It places the character using the setting of the inverse mask (location $32). It handles these control characters: carriage return, line feed, backspace, and bell. When it returns control to the calling program, all registers are intact.

CROUT, $FD8E

CROUT sends a carriage return to the current output device.

CROUT1, $FD8B

CROUT1 clears the screen from the current cursor position to the edge of the text window, then calls CROUT.

HLINE, $F819

HLINE draws a horizontal line of blocks of the color set by SETCOL on the low-resolution graphics display. Call HLINE with the vertical coordinate of the line in the accumulator, the leftmost horizontal coordinate in the Y register, and the rightmost horizontal coordinate in location $2C. HLINE returns with A and Y scrambled and X intact.

HOME, $FC58

HOME clears the display and puts the cursor in the upper-left corner of the screen.

PLOT, $F800

PLOT puts a single block of the color value set by SETCOL on the low-resolution display screen. Call PLOT with the vertical coordinate of the line in the accumulator, and its horizontal position in the Y register. PLOT returns with the accumulator scrambled, but X and Y intact.

PRBL2, $F94A

PRBL2 sends from 1 to 256 blanks to the standard output device. Upon entry, the X register should contain the number of blanks to send. If X = $00, then PRBLANK will send 256 blanks.

PRBYTE, $FDDA

PRBYTE sends the contents of the accumulator in hexadecimal to the current output device. The contents of the accumulator are scrambled.

PRERR, $FF2D

PRERR sends the word ERR, followed by a bell character, to the standard output device. On return, the accumulator is scrambled.

PRHEX, $FDE3

PRHEX prints the lower nibble of the byte in the accumulator as a single hexadecimal digit. On return, the contents of the accumulator are scrambled.

PRNTAX, $F941

PRNTAX prints the contents of the A and X registers as a four-digit hexadecimal value. The accumulator contains the first byte printed, taband the X register contains the second. On return, the contents of the accumulator are scrambled.

SCRN, $F871

SCRN returns the color value of a single block on the low-resolution display. Call it with the vertical position of the block in the accumulator and the horizontal position in the Y register. The block's color is returned in the accumulator. No other registers are changed.

SETCOL, $F864

SETCOL sets the color used for plotting in low-resolution graphics to the value passed in the acumulator. The colors and their values are listed in Table 2-6.

VTABZ, $FC24

VTABZ sets the cursor vertical position. Unlike setting the position at location $25, change of cursor position doesn't wait until a carriage return character has been sent.

VLINE, $F828

VLINE draws a vertical line of blocks of the color set by SETCOL on the low-resolution display. Call VLINE with the horizontal coordinate of the line in the Y register, the top vertical coordinate in the accumulator, and the bottom vertical coordinate in location $2D. VLINE returns with the accumulator scrambled

I/O firmware support

Apple IIe video firmware conforms to the I/O firmware protocol of Apple II Pascal 1.1. However, it does not support windows other than the full 80-by-24 window in 80-column mode, and the full 40-by-24 window in 40-column mode. The video protocol table is shown in Table 3-9.

Table 3-9
Slot 3 firmware protocol table

Address	Value	Description
$C30B	$01	Generic signature byte of firmware cards.
$C30C	$88	80-column card device signature.
$C30D	$ii	$C3ii is entry point of initialization routine (PINIT).
$C30E	$rr	$C3rr is entry point of read routine (PREAD).
$C30F	$ww	$C3ww is entry point of write routine (PWRITE).
$C310	$ss	$C3ss is entry point of the status routine (PSTATUS).

PINIT, $C30D

PINIT does the following:

- sets a full 80-column window
- sets 80STORE ($C001)
- sets 80COL ($C00D)
- switches on ALTCHAR ($C00F)
- clears the screen; places cursor in upper-left corner
- displays the cursor

PREAD, $C30E

PREAD reads a character from the keyboard and places it in the accumulator with the high bit cleared. It also puts a zero in the X register to indicate IORESULT = GOOD.

PWRITE, $C30F

PWRITE should be called after placing a character in the accumulator with its high bit cleared. PWRITE does the following:

- It turns the cursor off.
- If the character in the accumulator is not a control character, it turns the high bit on for normal display or off for inverse display, displays it at the current cursor position, and advances the cursor. If the character at the end of a line, PWRITE does carriage return but not line feed. (See Table 3-10 for control character functions.)

When PWRITE has completed this, it

- turns the cursor back on (if it was not intentionally turned off)
- puts a zero in the X register (IORESULT = GOOD) and returns to the calling program

Table 3-10
Pascal video control functions

Control-	Hex	Function performed
E or e	$05	Turns cursor on (enables cursor display)
F or f	$06	Turns cursor off (disables cursor display)
G or g	$07	Sounds bell (beeps)
H or h	$08	Moves cursor left one column. If cursor was at beginning of line, moves it to end of preceding line
J or j	$0A	Moves cursor down one row; scrolls if needed
K or k	$0B	Clears to end of screen
L or l	$0C	Clears screen; moves cursor to upper-left of screen
M or m	$0D	Moves cursor to column 0
N or n	$0E	Displays subsequent characters in normal video (Characters already on display are unaffected.)
O or o	$0F	Displays subsequent characters in inverse video (Characters already on display are unaffected.)
V or v	$16	Scrolls screen up one line; clears bottom line
W or w	$17	Scrolls screen down one line; clears top line
Y or y	$19	Moves cursor to upper-left (home) position on screen
Z or z	$1A	Clears entire line that cursor is on
| or \	$1C	Moves cursor right one column; if at end of line, does Control-M
} or]	$1D	Clears to end of the line the cursor is on, including current cursor position; does not move cursor
^ or 6	$1E	GOTOxy: initiates a GOTOxy sequence; interprets the next two characters as x+32 and y+32, respectively
_	$1F	If not at top of screen, moves cursor up one line

PSTATUS, $C310

A program that calls PSTATUS must first put a request code in the accumulator: either a 0, meaning "Ready for output?" or a 1, meaning "Is there any input?" PSTATUS returns with the reply in the carry bit: 0 (No) or 1 (Yes).

PSTATUS returns with a 0 in the X register (IORESULT = GOOD), unless the request was not 0 or 1; then PSTATUS returns with a 3 in the X register (IORESULT = ILLEGAL OPERATION).

Downloaded from www.Apple2Online.com

Chapter 4

Memory Organization

For information about these shared address spaces, see the section "Bank-Switched Memory" in this chapter and the sections "Other Uses of I/O Memory Space" and "Expansion ROM Space" in Chapter 6.

The Apple IIe's microprocessor can address 65,536 (64K) locations in memory. All of the Apple IIe's RAM, ROM, and I/O devices are allocated locations in this 64K address range. Because each device or function requires a certain block of memory, there are more devices and functions than there are legal addresses, which means that the legal addresses must be shared. This sharing is accomplished through a technique called *bank-switching*, which is explained under the "Bank-Switched Memory" and "Auxiliary Memory and Firmware" sections in this chapter.

For details of the built-in I/O feature, refer to the descriptions in Chapters 2 and 3.

All input and output in the Apple IIe is *memory mapped*. This means that all devices connected to the Apple IIe appear to be a set of memory locations to the computer. In this chapter, the I/O memory spaces are described simply as blocks of memory.

For information about I/O operations with peripheral cards, refer to Chapter 6.

Programmers often refer to the Apple IIe's memory in 256-byte blocks called **pages.** One reason for this is that a one-byte address counter or index register can specify one of 256 different locations. Thus, *page 0* consists of memory locations from 0 to 255 (hexadecimal $00 to $FF), inclusive; *page 1* consists of locations 256 to 511 (hexadecimal $0100 to $01FF). Note that the page number is the high-order part of the hexadecimal address. Don't confuse this kind of page with the display buffers in the Apple IIe, which are sometimes referred to as *Page 1* and *Page 2*.

Main memory map

The map of the main memory address space in Figure 4-1 shows the functions of the major areas of memory. For more details on the I/O space from 48K to 52K ($C000 through $CFFF), refer to Chapter 2 and Chapter 6; the bank-switched memory in the memory space from 52K to 64K ($D000 through $FFFF) is described in the section "Bank-Switched Memory" later in this chapter.

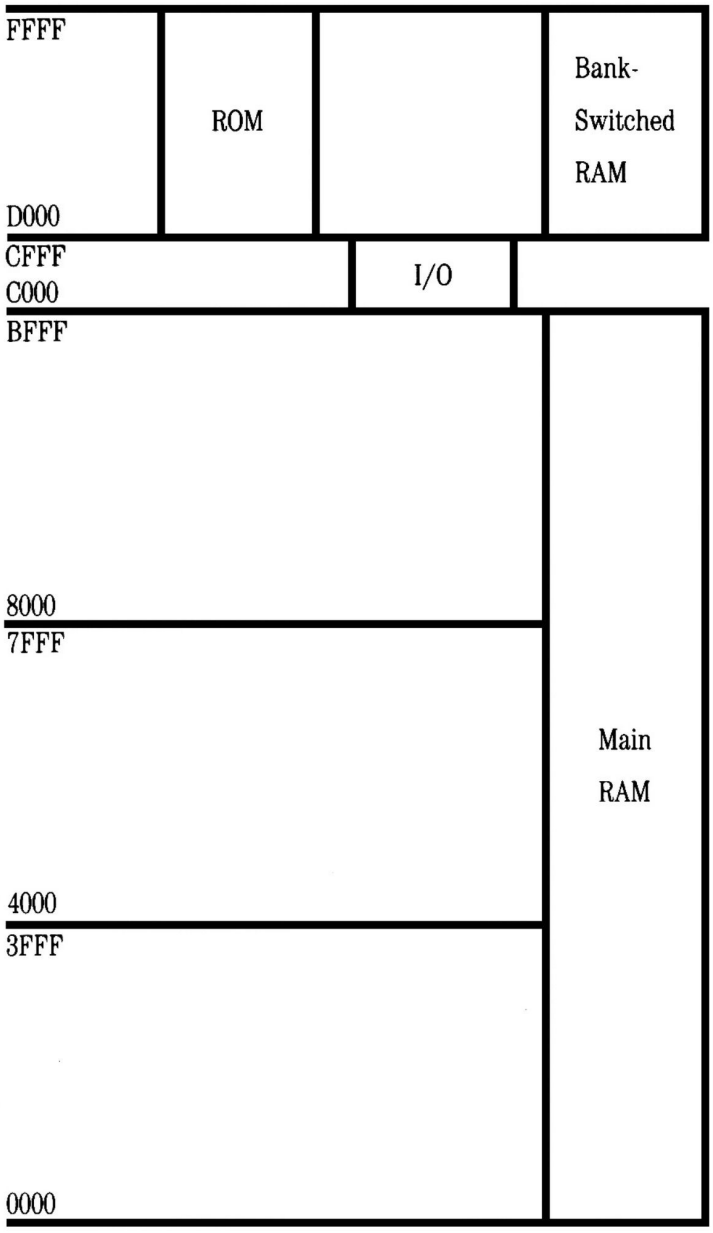

Figure 4-1
System memory map

RAM memory allocation

As Figure 4-1 shows, the largest portion of the Apple IIe's memory space is allocated to programmable storage (RAM). Figure 4-2 shows the areas allocated to RAM. The main RAM memory extends from location 0 to location 49151 (hex $BFFF), and occupies pages 0 through 191 (hexadecimal $BF). There is also RAM storage in the bank-switched space from 53248 to 65535 (hexadecimal $D000 to $FFFF), described in the section "Bank-Switched Memory" later in this chapter, and auxiliary RAM, described in the section "Auxiliary Memory and Firmware" later in this chapter.

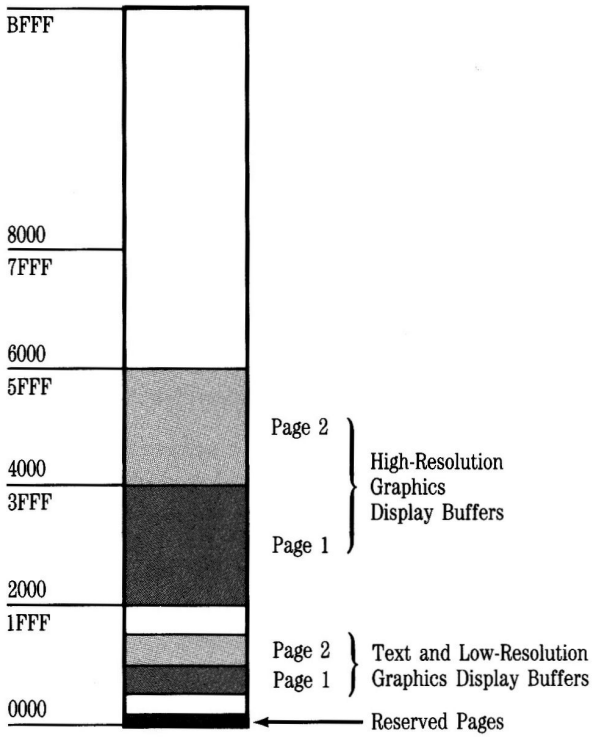

Figure 4-2
RAM allocation map

Reserved memory pages

Most of the Apple IIe's RAM is available for storing your programs and data. However, a few RAM pages are reserved for the use of the Monitor firmware and the BASIC interpreters. The reserved pages are described in the following sections.

Important The system does not prevent your using these pages, but if you do use them, you must be careful not to disturb the system data they contain, or you will cause the system to malfunction.

Page zero

Several of the 65C02 microprocessor's addressing modes require the use of addresses in *page zero,* also called **zero page.** The Monitor, the BASIC interpreters, DOS 3.3, and ProDOS all make extensive use of page zero.

To use indirect addressing in your assembly-language programs, you must store base addresses in page zero. At the same time, you must avoid interfering with the other programs that use page zero—the Monitor, the BASIC interpreters, and the disk operating systems. One way to avoid conflicts is to use only those page-zero locations not already used by other programs. Tables 4-1 through 4-5 show the locations in page zero used by the Monitor, Applesoft BASIC, Integer BASIC, DOS 3.3, and ProDOS.

As you can see from the tables, page zero is pretty well used up, except for a few bytes here and there. It's hard to find more than one or two bytes that aren't used by BASIC, ProDOS, the Monitor, or DOS. Rather than trying to squeeze your data into an unused corner, you may prefer a safer alternative: save the contents of part of page zero, use that part, then restore the previous contents before you pass control to another program.

The 65C02 stack

The 65C02 microprocessor uses page 1 as the **stack**—the place where subroutine return addresses are stored—in last-in, first-out sequence. Many programs also use the stack for temporary storage of the registers (via push and pull operations). You can do the same, but you should use it sparingly. The stack pointer is eight bits long, so the stack can hold only 256 bytes of information at a time. When you store the 257th byte in the stack, the stack pointer repeats itself, or wraps around, so that the new byte replaces the first byte stored, which is now lost. This writing over old data is called *stack overflow,* and when it happens, the program continues to run normally until the lost information is needed, whereupon the program terminates catastrophically.

The input buffer

The GETLN input routine, which is used by the Monitor and the BASIC interpreters, uses page 2 as its keyboard-input buffer. The size of this buffer sets the maximum size of input strings. (Applesoft uses only the first 237 bytes, although it permits you to type in 256 characters.) If you know that you won't be typing any long input strings, you can store temporary data at the upper end of page 2.

Link-address storage

For more information about links, see the section "Changing the Standard I/O Links" in Chapter 6.

The Monitor, ProDOS, and DOS 3.3 all use the upper part of page 3 for link addresses or vectors.

BASIC programs sometimes need short machine-language routines. These routines are usually stored in the lower part of page 3.

The display buffers

See Chapter 6 for information on the memory locations that are reserved for peripheral cards.

The primary text and low-resolution-graphics display buffer occupies memory pages 4 through 7 (locations 1024 through 2047, hexadecimal $0400 through $07FF). This entire 1024-byte area is called *text Page 1,* and it is not usable for program and data storage. There are 64 locations in this area that are not displayed on the screen; these locations are reserved for use by the peripheral cards.

Text Page 2, the alternate text and low-resolution-graphics display buffer, occupies memory pages 8 through 11 (locations 2048 through 3071, hexadecimal $0800 through $0BFF). Most programs do not use Page 2 for displays, so they can use this area for program or data storage.

The primary high-resolution-graphics display buffer, called *high-resolution Page 1,* occupies memory pages 32 through 63 (locations 8192 through 16383, hexadecimal $2000 through $3FFF). If your program doesn't use high-resolution graphics, this area is usable for programs or data.

High-resolution Page 2 occupies memory pages 64 through 95 (locations 16384 through 24575, hexadecimal $4000 through $5FFF). Most programs use this area for program or data storage.

For more information about the display buffers, see the section "Video Display Pages" in Chapter 2.

The primary double high-resolution-graphics display buffer, called *double high-resolution Page 1,* occupies memory pages 32 through 63 (locations 8192 through 16383, hexadecimal $2000 through $3FFF) in both main and auxiliary memory. If your program doesn't use high-resolution or double high-resolution graphics, this area of main memory is usable for programs or data.

Table 4-1
Monitor zero-page use

High nibble of address	Low nibble of address															
	$0	$1	$2	$3	$4	$5	$6	$7	$8	$9	$A	$B	$C	$D	$E	$F
$00																
$10																•*
$20	•	•	•	•	•	•	•	•	•	•	•	•	•	•	•	•
$30	•	•	•	•	•	•	•	•	•	•	•	•	•	•	•	•
$40	•	•	•	•	•	•	•	•	•	•					•	•
$50	•	•	•	•	•	•										
$60																
$70																
$80																
$90																
$A0																
$B0																
$C0																
$D0																
$E0																
$F0																

* Byte used in original Apple IIe ROMs, now free

Table 4-2
Applesoft zero-page use

High nibble of address	Low nibble of address															
	$0	$1	$2	$3	$4	$5	$6	$7	$8	$9	$A	$B	$C	$D	$E	$F
$00	•	•	•	•	•	•					•	•	•	•	•	•
$10	•	•	•	•	•	•	•	•	•	•	•	•	•	•		
$20							•	•					•	•		•
$30	•		•	•									•	•	•	•
$40																
$50	•	•	•	•	•	•	•	•	•	•	•	•	•	•	•	•
$60	•	•	•	•	•	•	•	•	•	•	•	•	•	•	•	•
$70	•	•	•	•	•	•	•	•	•	•	•	•	•	•	•	•
$80	•	•	•	•	•	•	•	•	•	•	•	•	•	•	•	•
$90	•	•	•	•	•	•	•	•	•	•	•	•	•	•	•	•
$A0	•	•	•	•	•	•	•	•	•	•	•	•	•	•	•	•
$B0	•	•	•	•	•	•	•	•	•	•	•	•	•	•	•	•
$C0	•	•	•	•	•	•	•	•	•	•	•	•	•	•		
$D0	•	•	•	•	•	•	•		•	•	•	•	•	•	•	•
$E0	•	•	•	•	•	•	•	•	•	•	•					
$F0	•	•	•	•	•	•	•	•	•	•						•

Table 4-3
Integer BASIC zero-page use

High nibble of address	Low nibble of address															
	$0	$1	$2	$3	$4	$5	$6	$7	$8	$9	$A	$B	$C	$D	$E	$F
$00														•		
$10																
$20																
$30																
$40											•	•	•	•		
$50						•	•	•	•	•	•	•	•	•	•	•
$60	•	•	•	•	•	•	•	•	•	•	•	•	•	•	•	•
$70	•	•	•	•	•	•	•	•	•	•	•	•	•	•	•	•
$80	•	•	•	•	•	•	•	•	•	•	•	•	•	•	•	•
$90	•	•	•	•	•	•	•	•	•	•	•	•	•	•	•	•
$A0	•	•	•	•	•	•	•	•	•	•	•	•	•	•	•	•
$B0	•	•	•	•	•	•	•	•	•	•	•	•	•	•	•	•
$C0	•	•	•	•	•	•	•	•	•	•	•	•	•	•	•	•
$D0	•	•	•	•	•	•	•	•	•	•	•	•	•	•	•	•
$E0																
$F0															•	•

Table 4-4
DOS 3.3 zero-page use

High nibble of address	Low nibble of address															
	$0	$1	$2	$3	$4	$5	$6	$7	$8	$9	$A	$B	$C	$D	$E	$F
$00																
$10																
$20							•	•			•	•	•	•	•	•
$30						•	•	•	•	•					•	•
$40	•	•	•	•	•	•	•	•	•		•	•	•	•		
$50																
$60								•	•	•	•					•
$70	•															
$80																
$90																
$A0																•
$B0	•															
$C0											•	•	•	•		
$D0									•							
$E0																
$F0																

Table 4-5
ProDOS MLI and disk-driver zero-page use

High nibble of address	Low nibble of address															
	$0	$1	$2	$3	$4	$5	$6	$7	$8	$9	$A	$B	$C	$D	$E	$F
$00	•	•														
$10																
$20																
$30											•	•	•	•	•	•
$40	•	•	•	•	•	•	•	•	•	•	•	•	•	•	•	
$50																
$60																
$70																
$80																
$90																
$A0																
$B0																
$C0																
$D0																
$E0																
$F0																

Bank-switched memory

The memory address space from 52K to 64K (hexadecimal $D000 through $FFFF) is doubly allocated: it is used for both ROM and RAM. The 12K bytes of ROM (read-only memory) in this address space contain the Monitor and the Applesoft BASIC interpreter. Alternatively, there are 16K bytes of RAM in this space. The RAM is normally used for storing either the Integer BASIC interpreter or part of the Pascal Operating System (purchased separately).

You may be wondering why this part of memory has such a split personality. Some of the reasons are historical: the Apple IIe is able to run software written for the Apple II and Apple II Plus because it uses this part of memory in the same way they do. It's convenient to have the Applesoft interpreter in ROM, but the Apple IIe, like an Apple II with a language card, is also able to use that address space for other things when Applesoft is not needed.

You may also be wondering how 16K bytes of RAM are mapped into only 12K bytes of address space. The usual answer is that it's done with mirrors, and that isn't a bad analogy: the 4K-byte address space from 52K to 56K (hexadecimal $D000 through $DFFF) is used twice.

Switching different blocks of memory into the same address space is called *bank switching*. There are actually two examples of bank switching going on here: first, the entire address space from 52K to 64K ($D000 through $FFFF) is switched between ROM and RAM, and second, the address space from 52K to 56K ($D000 to $DFFF) is switched between two different blocks of RAM.

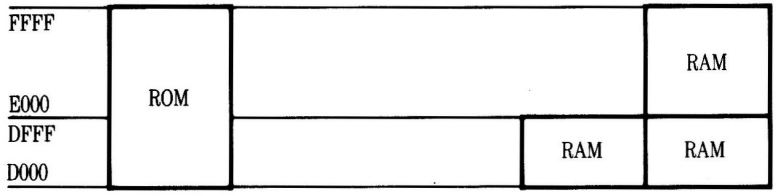

Figure 4-3
Bank-switched memory map

Setting bank switches

You switch banks of memory in the same way you switch other functions in the Apple IIe: by using soft switches. Read operations to these soft switches do three things: select either RAM or ROM in this memory space; enable or inhibit writing to the RAM; and select the first or second 4K-byte bank of RAM in the address space $D000 to $DFFF.

Warning Do not use these switches without careful planning. Careless switching between RAM and ROM is almost certain to have catastrophic effects on your program.

Table 4-6 shows the addresses of the soft switches for enabling all combinations of reading and writing in this memory space. All of the hexadecimal values of the addresses are of the form $C08x. Notice that several addresses perform the same function: this is because the functions are activated by single address bits. For example, any address of the form $C08x with a 1 in the low-order bit enables the RAM for writing. Similarly, bit 3 of the address selects which 4K block of RAM to use for the address space $D000–$DFFF; if bit 3 is 0, the first bank of RAM is used, and if bit 3 is 1, the second bank is used.

When RAM is not enabled for reading, the ROM in this address space is enabled. Even when RAM is not enabled for reading, it can still be written to if it is write-enabled.

When you turn power on or reset the Apple IIe, it initializes the bank switches for reading the ROM and writing the RAM, using the second bank of RAM. Note that this is different from the reset on the Apple II Plus, which didn't affect the bank-switched memory (the language card). On the Apple IIe, you can't use the reset vector to return control to a program in bank-switched memory, as you could on the Apple II Plus.

- *Reset with Integer BASIC:* When you are using Integer BASIC on the Apple IIe, reset works correctly, restarting BASIC with your program intact. This happens because the reset vector transfers control to DOS, and DOS resets the switches for the current version of BASIC.

Table 4-6
Bank select switches

Name	Action	Hex	Function
	R	$C080	Read RAM; no write; use $D000 bank 2.
	RR	$C081	Read ROM; write RAM; use $D000 bank 2.
	R	$C082	Read ROM; no write; use $D000 bank 2.
	RR	$C083	Read and write RAM; use $D000 bank 2.
	R	$C088	Read RAM; no write; use $D000 bank 1.
	RR	$C089	Read ROM; write RAM; use $D000 bank 1.
	R	$C08A	Read ROM; no write; use $D000 bank 1.
	RR	$C08B	Read and write RAM; use $D000 bank 1.
RDBNK2	R7	$C011	Read whether $D000 bank 2 (1) or bank 1 (0).
RDLCRAM	R7	$C012	Reading RAM (1) or ROM (0).
ALTZP	W	$C008	Off: use main bank, page 0 and page 1.
ALTZP	W	$C009	On: use auxiliary bank, page 0 and page 1.
RDALTZP	R7	$C016	Read whether auxiliary (1) or main (0) bank.

Note: R means read the location, *W* means write anything to the location, *R/W* means read or write, and *R7* means read the location and then check bit 7.

- *Reading and writing to RAM banks:* You can't read one RAM bank and write to the other; if you select either RAM bank for reading, you get that one for writing as well.

- *Reading RAM and ROM:* You can't read from ROM in part of the bank-switched memory and read from RAM in the rest: specifically, you can't read the Monitor in ROM while reading bank-switched RAM. If you want to use the Monitor firmware with a program in bank-switched RAM, copy the Monitor from ROM (locations $F800 through $FFCB) into bank-switched RAM. You can't do this from Pascal or ProDOS.

To see how to use these switches, look at the following section of an assembly-language program:

```
AD 83 C0        LDA $C083       *SELECT 2ND 4K BANK & READ/WRITE
AD 83 C0        LDA $C083       *BY TWO CONSECUTIVE READS
A9 D0           LDA #$D0        *SET UP...
85 01           STA BEGIN       *...NEW...
A9 FF           LDA #$FF        *...MAIN-MEMORY...
85 02           STA END         *...POINTERS...
20 97 C9        JSR RAMTST      *...FOR 12K BANK

AD 8B C0        LDA $C08B       *SELECT 1ST 4K BANK
20 97 C9        JSR RAMTST      *USE ABOVE POINTERS

AD 83 C0        LDA $C088       *SELECT 1ST BANK & WRITE PROTECT
A9 80           LDA #$80
E6 10           INC TSTNUM
20 58 C9        JSR WPTSINIT

AD 80 C0        LDA $C080       *SELECT 2ND BANK & WRITE PROTECT
E6 10           INC TSTNUM
A9 01           LDA #PAT12K
20 58 C9        JSR WPTSINIT

AD 8B C0        LDA $C08B       *SELECT 1ST BANK & READ/WRITE
AD 8B C0        LDA $C08B       *BY TWO CONSECUTIVE READS
E6 0E           INC RWMODE      *FLAG RAM IN READ/WRITE
E6 10           INC TSTNUM
A9 08           LDA #PAT4K
20 58 C9        JSR WPTSINIT
```

The LDA instruction, which performs a read operation to the specified memory location, is used for setting the soft switches. The unusual sequence of two consecutive LDA instructions performs the two consecutive reads that write-enable this area of RAM; in this case, the data that are read are not used.

Reading bank switches

You can read which language card bank is currently switched in by reading the soft switch at $C011. You can find out whether the language card or ROM is switched in by reading $C012. The only way that you can find out whether the language card RAM is write-enabled or not is by trying to write some data to the card's RAM space.

Auxiliary memory and firmware

By installing an optional card in the auxiliary slot, you can add more memory to the Apple IIe. One such card is the Apple IIe 80-Column Text Card, which has 1K bytes of additional RAM for expanding the text display from 40 columns to 80 columns.

Another 80-column text card, the Apple IIe Extended 80-Column Text Card, has 64K of additional RAM. A 1K-byte area of this memory serves the same purpose as the memory on the 80-Column Text Card: expanding the text display to 80 columns. The other 63K bytes can be used as auxiliary program and data storage. If you use only 40-column displays, the entire 64K bytes is available for programs and data. The Extended 80-Column Text Card is installed in the extended keyboard IIe and shipped with later models of the enhanced IIe.

Warning Do not attempt to use the auxiliary memory from a BASIC program. The BASIC interpreter uses several areas in main RAM, including the stack and the zero page. If you switch to auxiliary memory in these areas, the BASIC interpreter fails and you must reset the system and start over.

As you can see by studying the memory map in Figure 4-4, the auxiliary memory is broken into two large sections and one small one. The largest section is switched into the memory address space from 512 to 49151 ($0200 through $BFFF). This space includes the display buffer pages: as described in the section "Text Modes" in Chapter 2, space in auxiliary memory is used for one half of the 80-column text display. You can switch to the auxiliary memory for this entire memory space, or you can switch just the display pages: see the next section, "Memory Mode Switching."

- *Soft switches:* If the only reason you are using auxiliary memory is for the 80-column display, note that you can store into the display page in auxiliary memory by using the 80STORE and PAGE2 soft switches described in the section "Display Mode Switching" in Chapter 2.

The other large section of auxiliary memory is switched into the memory address space from 52K to 64K ($D000 through $FFFF). This memory space and the switches that control it are described earlier in this chapter in the section "Bank-Switched Memory." If you use the auxiliary RAM in this space, the soft switches have the same effect on the auxiliary RAM that they do on the main RAM: the bank switching is independent of the auxiliary-RAM switching.

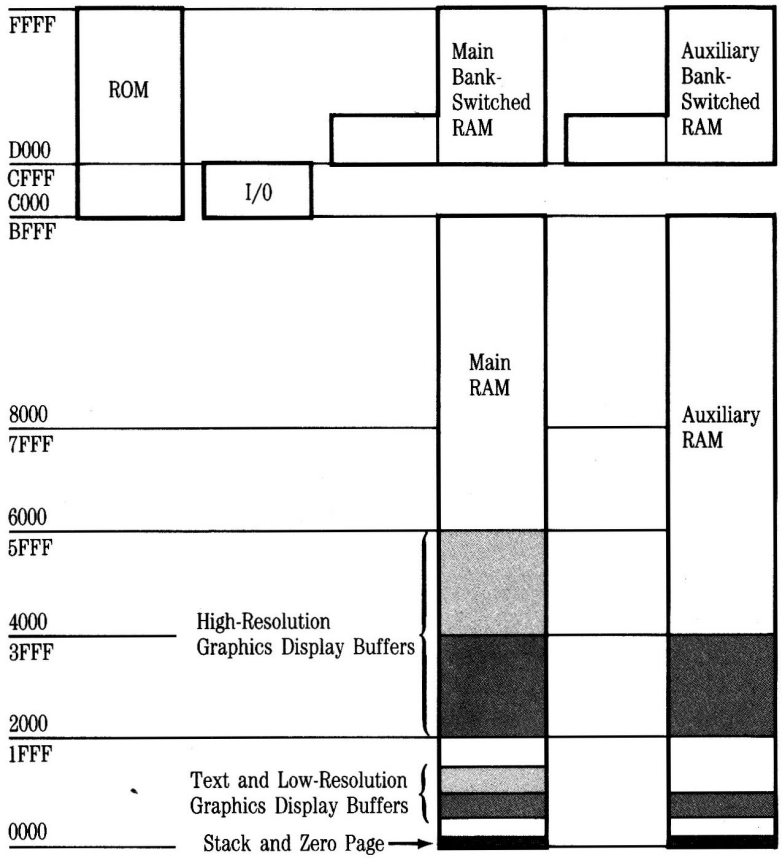

Figure 4-4
Memory map with auxilliary memory

- *Bank switches:* Note that the soft switches for the bank-switched memory, described in the previous section, do not change when you switch to auxiliary RAM. In particular, if ROM is enabled in the bank-switched memory space before you switch to auxiliary memory, the ROM will still be enabled after you switch. Any time you switch the bank-switched section of auxiliary memory in and out, you must also make sure that the bank switches are set properly.

When you switch in the auxiliary RAM in the bank-switched space, you also switch the first two pages, from 0 to 511 ($0000 through $01FF). This part of memory contains page zero, which is used for important data and base addresses, and page one, which is the 65C02 stack. The stack and zero page are switched this way so that system software running in the bank-switched memory space can maintain its own stack and zero page while it manipulates the 48K address space (from $0200 to $BFFF) in either main memory or auxiliary memory.

Memory mode switching

Switching the 48K section of memory is performed by two soft switches: the switch named RAMRD selects main or auxiliary memory for reading, and the one named RAMWRT selects main or auxiliary memory for writing. As shown in Table 4-7, each switch has a pair of memory locations dedicated to it, one to select main memory, and the other to select auxiliary memory. Enabling the read and write functions independently makes it possible for a program whose instructions are being fetched from one memory space to store data into the other memory space.

Warning Do not use these switches without careful planning. Careless switching between main and auxiliary memories is almost certain to have catastrophic effects on the operation of the Apple IIe. For example, if you switch to auxiliary memory with no card in the slot, the program that is running will stop and you will have to reset the Apple IIe and start over.

Writing to the soft switch at location $C003 turns RAMRD on and enables auxiliary memory for reading; writing to location $C002 turns RAMRD off and enables main memory for reading. Writing to the soft switch at location $C005 turns RAMWRT on and enables the auxiliary memory for writing; writing to location $C004 turns RAMWRT off and enables main memory for writing. By setting these switches independently, you can use any of the four combinations of reading and writing in main or auxiliary memory.

Auxiliary memory corresponding to text Page 1 and high-resolution graphics Page 1 can be used as part of the address space from $0200 to $BFFF by using RAMRD and RAMWRT as described above. These areas in auxiliary RAM can also be controlled separately by using the switches described in the section "Display Mode Switching" in Chapter 2. Those switches are named 80STORE, PAGE2, and HIRES.

As shown in Table 4-7, the 80STORE switch functions as an enabling switch: with it on, the PAGE2 switch selects main memory or auxiliary memory. With the HIRES switch off, the memory space switched by PAGE2 is the text Page 1, from $0400 to $07FF; with HIRES on, PAGE2 switches both text Page 1 and high-resolution graphics Page 1, from $2000 to $3FFF.

If you are using both the auxiliary-RAM control switches and the auxiliary-display-page control switches, the display-page control switches take priority: if 80STORE is off, RAMRD and RAMWRT work for the entire memory space from $0200 to $BFFF, but if 80STORE is on, RAMRD and RAMWRT have no effect on the display page. Specifically, if 80STORE is on and HIRES is off, PAGE2 controls text Page 1 regardless of the settings of RAMRD and RAMWRT. Likewise, if 80STORE and HIRES are both on, PAGE2 controls both text Page 1 and high-resolution graphics Page 1, again regardless of RAMRD and RAMWRT.

The next section, "Auxiliary-Memory Subroutines," describes firmware that you can call to help you switch between main and auxiliary memory.

A single soft switch named ALTZP (for *alternate zero page*) switches the bank-switched memory and the associated stack and zero page area between main and auxiliary memory. As shown in Table 4-7, writing to location $C009 turns ALTZP on and selects auxiliary-memory stack and zero page; writing to the soft switch at location $C008 turns ALTZP off and selects main-memory stack and zero page for both reading and writing.

Table 4-7
Auxiliary-memory select switches

Name	Function	Location		Notes
		Hex	Decimal	
RAMRD	Read auxiliary memory	$C003	49155 –16381	Write
	Read main memory	$C002	49154 –16382	Write
	Read RAMRD switch	$C013	49171 –16365	Read
RAMWRT	Write auxiliary memory	$C005	49157 –16379	Write
	Write main memory	$C004	49156 –16380	Write
	Read RAMWRT switch	$C014	49172 –16354	Read
80STORE	On: access display page	$C001	49153 –16383	Write
	Off: use RAMRD, RAMWRT	$C000	49152 –16384	Write
	Read 80STORE switch	$C018	49176 –16360	Read
PAGE2	Page 2 on (aux. memory)	$C055	49237 –16299	*
	Page 2 off (main memory)	$C054	49236 –16300	*
	Read PAGE2 switch	$C01C	49180 –16356	Read
HIRES	On: access high-res pages	$C057	49239 –16297	†
	Off: use RAMRD, RAMWRT	$C056	49238 –16298	†
	Read HIRES switch	$C01D	49181 –16355	Read
ALTZP	Aux. stack & zero page	$C009	49161 –16373	Write
	Main stack & zero page	$C008	49160 –16374	Write
	Read ALTZP switch	$C016	49174 –16352	Read

* When 80STORE is on, the PAGE2 switch selects main or auxiliary display memory.
† When 80STORE is on, the HIRES switch enables you to use the PAGE2 switch to switch between the high-resolution Page 1 area in main memory or auxiliary memory.

When these switches are on, auxiliary memory is being used; when they are off, main memory is being used.

There are three more locations associated with the auxiliary-memory switches. The high-order bits of the bytes you read at these locations tell you the settings of the three soft switches described above. The byte you read at location $C013 has its high bit set to 1 if RAMRD is on (auxiliary memory is read-enabled), or 0 if RAMRD is off (the 48K block of main memory is read-enabled). The byte at location $C014 has its high bit set to 1 if RAMWRT is on (auxiliary memory is write-enabled), or 0 if RAMWRT is off (the 48K block of main memory is write-enabled). The byte at location $C016 has its high bit set to 1 if ALTZP is on (the bank-switched area, stack, and zero page in the auxiliary memory are selected), or 0 if ALTZP is off (these areas in main memory are selected).

- *Sharing memory:* In order to have enough memory locations for all of the soft switches and remain compatible with the Apple II and Apple II Plus, the soft switches listed in Table 4-7 share their memory locations with the keyboard functions listed in Table 2-1. The operations—read or write—shown in Table 4-7 for controlling the auxiliary memory are just the ones that are not used for reading the keyboard and clearing the strobe.

Auxiliary-memory subroutines

If you want to write assembly-language programs that use auxiliary memory but you don't want to manage the auxiliary memory yourself, you can use the built-in auxiliary-memory subroutines. These subroutines make it possible to use the auxiliary memory without having to manipulate the soft switches described in the previous section.

Important The subroutines described below make it easier to use auxiliary memory, but they do not protect you from errors. You still have to plan your use of auxiliary memory to avoid catastrophic effects on your program.

You use these built-in subroutines the same way you use the I/O subroutines described in Chapter 3: by making subroutine calls to their starting locations. Those locations are shown in Table 4-8.

Table 4-8
48K RAM transfer routines

Name	Action	Hex	Function
AUXMOVE	JSR	$C311	Moves data blocks between main and auxiliary 48K memory
XFER	JMP	$C314	Transfers program control between main and auxiliary 48K memory

Moving data to auxiliary memory

In your assembly-language programs, you can use the built-in subroutine named AUXMOVE to copy blocks of data from main memory to auxiliary memory or from auxiliary memory to main memory. Before calling this routine, you must put the data addresses into byte pairs in page zero and set the carry bit to select the direction of the move—main to auxiliary or auxiliary to main.

Warning Don't try to use AUXMOVE to copy data in page zero or page one (the 65C02 stack) or in the bank-switched memory ($D000-$FFFF). AUXMOVE uses page zero all during the copy, so it can't handle moves in the memory space switched by ALTZP.

The pairs of bytes you use for passing addresses to this subroutine are called A1, A2, and A4, and they are used for parameter passing by several of the Apple IIe's built-in routines. The addresses of these byte pairs are shown in Table 4-9.

Table 4-9
Parameters for AUXMOVE routine

Name	Location	Parameter passed
Carry		1 = Move from main to auxiliary memory 0 = Move from auxiliary to main memory
A1L	$3C	Source starting address, low-order byte
A1H	$3D	Source starting address, high-order byte
A2L	$3E	Source ending address, low-order byte
A2H	$3F	Source ending address, high-order byte
A4L	$42	Destination starting address, low-order byte
A4H	$43	Destination starting address, high-order byte

Note: The X, Y, and A registers are preserved by AUXMOVE.

Put the addresses of the first and last bytes of the block of memory you want to copy into A1 and A2. Put the starting address of the block of memory you want to copy the data to into A4.

The AUXMOVE routine uses the carry bit to select the direction to copy the data. To copy data from main memory to auxiliary memory, set the carry bit; to copy data from auxiliary memory to main memory, clear the carry bit.

When you make the subroutine call to AUXMOVE, the subroutine copies the block of data as specified by the A byte pairs and the carry bit. When it is finished, the accumulator and the X and Y registers are just as they were when you called AUXMOVE.

Transferring control to auxiliary memory

You can use the built-in routine named XFER to transfer control to and from program segments in auxiliary memory. You must set up three parameters before using XFER: the address of the routine you are transferring to, the direction of the transfer (main to auxiliary or auxiliary to main), and which page zero and stack you want to use.

Table 4-10
Parameters for XFER routine

Name or location	Parameter passed
Carry	1 = Transfer from main to auxiliary memory 0 = Transfer from auxiliary to main memory
Overflow	1 = Use page zero and stack in auxiliary memory 0 = Use page zero and stack in main memory
$03ED	Program starting address, low-order byte
$03EE	Program starting address, high-order byte

Note: The X, Y, and A parameters are preserved by XFER.

Put the transfer address into the two bytes at locations $03ED and $03EE, with the low-order byte first, as usual. The direction of the transfer is controlled by the carry bit: set the carry bit to transfer to a program in auxiliary memory; clear the carry bit to transfer to a program in main memory. Use the overflow bit to select which page zero and stack you want to use: clear the overflow bit to use the main memory; set the overflow bit to use the auxiliary memory.

After you have set up the parameters, pass control to the XFER routine by a jump instruction, rather than a subroutine call. XFER saves the accumulator and the transfer address on the current stack, then sets up the soft switches for the parameters you have selected and jumps to the new program.

Warning It is the programmer's responsibility to save the current stack pointer at $0100 in auxiliary memory and the alternate stack pointer at $0101 in auxiliary memory before calling XFER and to restore them after regaining control. Failure to do so will cause program errors.

The reset routine

To put the Apple IIe into a known state when it has just been turned on or after a program has malfunctioned, there is a procedure called the *reset routine*. The reset routine is built into the Apple IIe's firmware, and it is initiated any time you turn power on or press Reset while holding down Control. The reset routine puts the Apple IIe into its normal operating mode and restarts the resident program.

When you initiate a reset, hardware in the Apple IIe sets the memory-controlling soft switches to normal: main board RAM and ROM are enabled, and, if there is an 80-column text card in the auxiliary slot, expansion slot 3 is allocated to the built-in 80-column firmware. Auxiliary RAM is disabled and the bank-switched memory space is set up to read from ROM and write to RAM, using the second bank at $D000.

The reset routine sets the display-controlling soft switches to display 40-column text Page 1 using the primary character set, then sets the window equal to the full 40-column display, puts the cursor at the bottom of the screen, and sets the display format to normal.

For information about the I/O links, see the section "Changing the Standard I/O Links" in Chapter 6.

The reset routine sets the keyboard and display as the standard input and output devices by loading the standard I/O links. It turns annunciators 0 and 1 off and annunciators 2 and 3 on, clears the keyboard strobe, turns off any active peripheral-card ROM, and outputs a bell (tone).

For more information about peripheral-card ROM, see the section "Peripheral-Card ROM Space" in Chapter 6.

The Apple IIe has three types of reset: power-on reset, also called **cold-start** reset; **warm-start** reset; and forced cold-start reset. The procedure described above is the same for any type of reset. What happens next depends on the reset vector. The reset routine checks the reset vector to determine whether it is valid or not, as described later in this chapter in the section "The Reset Vector." If the reset was caused by turning the power on, the vector will not be valid, and the reset routine will perform the cold-start procedure. If the vector is valid, the routine will perform the warm-start procedure.

The cold-start procedure

If the reset vector is not valid, either the Apple IIe has just been turned on or something has caused memory contents to be changed. The reset routine clears the display and puts the string "`Apple //e`" ("`Apple ] [`" on an original IIe) at the top of the display. It loads the reset vector and the validity-check byte as described below, then starts checking the expansion slots to see if there is a disk drive controller card in one of them, starting with slot 7 and working down.

If the reset routine finds a controller card, it initiates the startup (bootstrap) routine that resides in the controller card's firmware. The startup routine then loads DOS or ProDOS from the disk in drive 1. When the operating system has been loaded, it displays other messages on the screen. If there is no disk in the disk drive, the drive motor just keeps spinning until you press Control-Reset.

For more information about ProDOS and the startup procedure, see the *ProDOS Technical Reference Manual*.

If the reset routine doesn't find a controller card, or if you press Control-Reset again before the startup procedure has been completed, the reset routine will continue without using the disk, and pass control to the built-in Applesoft interpreter.

The warm-start procedure

Whenever you press Control-Reset when the Apple IIe has already completed a cold-start reset, the reset vector is still valid and it is not necessary to reinitialize the entire system. The reset routine simply uses the vector to transfer control to the resident program, which is normally the built-in Applesoft interpreter. If the resident program is indeed Applesoft, your Applesoft program and variables are still intact. If you are using DOS, it is the resident program and it restarts either Applesoft or Integer BASIC, whichever you were using when you pressed Control-Reset.

Important A program in bank-switched RAM cannot use the reset vector to regain control after a reset, because the Apple IIe hardware enables ROM in the bank-switched memory space. If you are using Integer BASIC, which is in the bank-switched RAM, you are also using DOS, and it is DOS that controls the reset vector and restarts BASIC.

Forced cold start

If a program has loaded the reset vector to point to the beginning of the program, as described in the next section, pressing Control-Reset causes a warm-start reset that uses the vector to transfer control to that program. If you want to stop such a program without turning the power off and on, you can force a cold-start reset by holding down Open Apple and Control, then pressing and releasing Reset.

- *Unconditional restart:* When you want to stop a program unconditionally—for example, to start up the Apple IIe with some other program—you should use the forced cold-start reset, Open Apple-Control-Reset, instead of turning the power off and on.

Whenever you press Control-Reset, firmware in the Apple IIe always checks to see whether either Apple key is down. If the Solid Apple key (or Option key, in the extended keyboard IIe) is down, with or without the Open Apple key, the firmware performs the self-test described later in this chapter. If only the Open Apple key is down, the firmware starts a forced cold-start reset. First, it destroys the program or data in memory by writing two bytes of arbitrary data into each page of main RAM. The two bytes that get written over in page 3 are the ones that contain the reset vector. The reset routine then performs a normal cold-start reset.

The reset vector

When you reset the Apple IIe, the reset routine transfers control to the resident program by means of an address stored in page 3 of main RAM. This address is called a *vector* because it directs program control to a specified destination. There are several other vector addresses stored in page 3, as shown in Table 4-11, including the interrupt vectors described in the section "Interrupts on the Enhanced Apple IIe" in Chapter 6, and the ProDOS and DOS vectors described in the *ProDOS Technical Reference Manual* and the *Apple II DOS Programmer's Manual.*

The cold-start reset routine stores the starting address of the built-in Applesoft interpreter, low-order byte first, in the reset vector address at locations 1010 and 1011 (hexadecimal $03F2 and $03F3). It then stores a validity-check byte, also called the *power-up byte,* at location 1012 (hexadecimal $03F4). The validity-check byte is computed by performing an exclusive-OR of the second byte of the vector with the constant 165 (hexadecimal $A5). Each time you reset the Apple IIe, the reset routine uses this byte to determine whether the reset vector is still valid.

You can change the reset vector so that the reset routine will transfer control to your program instead of to the Applesoft interpreter. For this to work, you must also change the validity-check byte to the exclusive-OR of the high-order byte of your new reset vector with the constant 165 ($A5). If you fail to do this, then the next time you reset the Apple IIe the reset routine will determine that the reset vector is invalid and perform a cold-start reset, eventually transferring control to the disk startup routine or to Applesoft.

The reset routine has a subroutine that generates the validity-check byte for the current reset vector. You can use this subroutine by doing a subroutine call to location –1169 (hexadecimal $FB6F). When your program finishes, it can return the Apple IIe to normal operation by restoring the original reset vector and again calling the subroutine to fix up the validity-check byte.

Table 4-11
Page 3 vectors

Vector address	Vector function
$3F0$3F1	Address of the subroutine that handles BRK requests (normally $59, $FA)
$3F2$3F3	Reset vector (see text)
$3F4	Power-up byte (see text)
$3F5$3F6$3F7	Jump instruction to the subroutine that handles Applesoft & commands (normally $4C, $58, $FF)
$3F8$3F9$3FA	Jump instruction to the subroutine that handles user Control-Y commands
$3FB$3FC$3FD	Jump instruction to the subroutine that handles nonmaskable interrupts
$3FE$3FF	Interrupt vector (address of the subroutine that handles interrupt requests

Automatic self-test

If you reset the Apple IIe by holding down Solid Apple and Control while pressing and releasing Reset, the reset routine will start running the built-in self-test. Successfully running this test assures you that the Apple IIe is operational.

Warning The self-test routine tests the Apple IIe's programmable memory by writing and then reading it. All programs and data in programmable memory when you run the self-test are destroyed.

The self-test takes several seconds to run. The screen will display some patterns in low-resolution mode that will change rapidly just before the self-test finishes. If the test finishes normally, the Apple IIe displays `System OK` and waits for you to restart the system.

If you have been running a program, some soft switches might be on when you run the self-test. If this happens, the self-test will display a message such as

```
IOU FLAG ES: 1
```

Turn the power off for several seconds, then turn it back on and run the self-test again. If it still fails, there is really something wrong; to get it corrected, contact your authorized Apple dealer for service.

Chapter 5

Using the Monitor

The System Monitor is a set of subroutines in the Apple IIe firmware. The Monitor provides a standard interface to the built-in I/O devices described in Chapter 2. The I/O subroutines described in Chapter 3 are part of the System Monitor.

The starting addresses for all of the standard subroutines are listed in Appendix B.

ProDOS, DOS 3.3, and the BASIC interpreters use these subroutines by direct calls to their starting locations, as described for the I/O subroutines in Chapter 3.

If you wish, you can call the standard subroutines from your programs in the same fashion.

You can perform most of the Monitor functions directly from the keyboard. This chapter tells you how to use the Monitor to

- look at one or more memory locations
- change the contents of any location
- write programs in machine language to be executed directly by the Apple IIe's microprocessor
- save blocks of data and programs onto cassette tape and read them back in again
- move and compare blocks of memory
- search for data bytes and ASCII characters in memory
- invoke other programs from the Monitor
- invoke the Mini-Assembler

Invoking the Monitor

The System Monitor starts at memory location $FF69 (decimal 65385 or -151). To invoke the Monitor, you make a CALL statement to this location from the keyboard or from a BASIC program. When the Monitor is running, its prompt character, an asterisk (*), appears on the left side of the display screen, followed by a blinking cursor.

To use the Monitor, you type commands at the keyboard. When you have finished using the Monitor, you return to the BASIC language you were previously using by pressing Control-Reset, by pressing Control-C then Return, or by typing 3D0G (3D-zero-G), which executes the resident program—usually Applesoft—whose address is stored in a jump instruction at location $3D0.

Syntax of Monitor commands

To give a command to the Monitor, you type a line on the keyboard, then press Return. The Monitor accepts the line using the standard I/O subroutine GETLN, described in Chapter 3. A Monitor command can be up to 255 character in length, ending with a carriage return.

A Monitor command can include three kinds of information: addresses, data values, and command characters. You type addresses and data values in hexadecimal notation. Hexadecimal notation uses the ten decimal digits (0–9) and the first six letters (A–F) to represent the sixteen values from 0 to 15. A pair of hexadecimal digits represent values from 0 to 255, corresponding to a byte; and a group of four hexadecimal digits can represent values from 0 to 65,536, corresponding to a word. Any address in the Apple IIe can be represented by four hexadecimal digits.

See "Summary of Monitor Commands" at the end of this chapter.

When the command you type calls for an address, the Monitor accepts any group of hexadecimal digits. If there are fewer than four digits in the group, it adds leading zeros; if there are more than four hexadecimal digits, the Monitor uses only the last four digits. It follows a similar procedure when the command syntax calls for two-digit data values.

Each command you type consists of one command character, usually the first letter of the command name. When the command is a letter, it can be either uppercase or lowercase. The Monitor recognizes 23 different command characters. Some of them are punctuation marks, some are letters, and some are control characters.

- *Note:* Although the Monitor recognizes and interprets control characters typed on an input line, they do not appear on the screen.

This chapter contains many examples of the use of Monitor commands. In the examples, the commands and values you type are shown in a normal typeface and the responses of the Monitor are in a computer typeface. Of course, when you perform the examples, all of the characters that appear on the display screen will be in the same typeface. Some of the data values displayed by your Apple IIe may differ from the values printed in these examples, because they are variables stored in programmable memory.

Monitor memory commands

When you use the Monitor to examine and change the contents of memory, it keeps track of the address of the last location whose value you inquired about and the address of the location that is next to have its value changed. These are called the *last opened location* and the *next changeable location.*

Examining memory contents

When you type the address of a memory location and press Return, the Monitor responds with the address you typed, a dash, a space, and the value stored at that location, like this:

```
*E000
E000-          20
*33
0033-          AA
*
```

Each time the Monitor displays the value stored at a location, it saves the address of that location as the last opened location and as the next changeable location.

Memory dump

When you type a period (.) followed by an address and then press Return, the Monitor displays a memory dump: the data values stored at all the memory locations from the one following the last opened location to the location whose address you typed following the period. The Monitor saves the last location displayed as both the last opened location and the next changeable location. The amount of data displayed by the Monitor depends on how much larger than the last opened location the address after the period is; here are some examples:

```
*20
0020- 00
*.2B
0021- 28 00 18 0F 0C 00 00
0028- A8 06 D0 07
```

```
*300

0300- 99

*.315

0301- B9 00 08 0A 0A 0A 99
0308- 00 08 C8 D0 F4 A6 2B A9
0310- 09 85 27 AD CC 03

*.32A

0316- 85 41
0318- 84 40 8A 4A 4A 4A 4A 09
0320- C0 85 3F A9 5D 85 3E 20
0328- 43 03 20
*
```

When the Monitor performs a memory dump, it starts at the location immediately following the last opened location and displays that address and the data value stored there. It then displays the values of successive locations up to and including the location whose address you typed, but only up to eight values on a line. When it reaches a location whose address is a multiple of eight—that is, one that ends with an 8 or a 0—it displays that address as the beginning of a new line, then continues displaying more values.

After the Monitor has displayed the value at the location whose address you specified in the command, it stops the memory dump and sets that location as both the last opened location and the next changeable location. If the address specified on the input line is less than the address of the last opened location, the Monitor displays only the address and value of the location following the last opened location.

You can combine the two commands, opening a location and dumping memory, by simply concatenating them: type the first address, a period, and the second address. This combination of two addresses separated by a period is called a *memory range.*

```
*300.32F

0300- 99 B9 00 08 0A 0A 0A 99
0308- 00 08 C8 D0 F4 A6 2B A9
0310- 09 85 27 AD CC 03 85 41
0318- 84 40 8A 4A 4A 4A 4A 09
0320- C0 85 3F A9 5D 85 3E 20
0328- 43 03 20 46 03 A5 3D 4D
```

```
*30.40

0030- AA 00 FF AA 05 C2 05 C2
0038- 1B FD D0 03 3C 00 40 00
0040- 30

*E015.E025

E016- 4C ED FD
E018- A9 20 C5 24 B0 0C A9 8D
E020- A0 07 20 ED FD A9 *
```

Pressing Return by itself causes the Monitor to display one line of a memory dump; that is, a memory dump from the location following the last opened location to the next multiple-of-eight boundary. The Monitor saves the address of the last location displayed as the last opened location and the next changeable location.

```
*5

0005- 00

*Return

00 00

*Return

0008- 00 00 00 00 00 00 00 00

*32

0032- FF

*Return

AA 00 C2 05 C2

*Return

0038- 1B FD D0 03 3C 00 3F 00
*
```

Changing memory contents

The preceding section showed you how to display the values stored in the Apple IIe's memory; this section shows you how to change those values. You can change any location in RAM—programmable memory—and you can also change the soft switches and output devices by changing the locations assigned to them.

Warning Use these commands carefully. If you change the zero-page locations used by Applesoft, ProDOS, or DOS, you may lose programs or data stored in memory.

Changing one byte

The previous commands keep track of the next changeable location; these commands make use of it. In the next example, you open location 0, then type a colon (:) followed by a value:

```
*0

0000- 00

*:5F
```

The contents of the next changeable location have just been changed to the value you typed, as you can see by examining that location:

```
*0

0000- 5F
*
```

You can also combine opening and changing into one operation by typing an address followed by a colon and a value. In the example, you type the address again to verify the change:

```
*302:42

*302

0302- 42
*
```

When you change the contents of a location, the value that was contained in that location disappears, never to be seen again. The new value will remain until you replace it with another value.

Changing consecutive locations

You don't have to type a separate command with an address, a colon, a value, and Return for each location you want to change. You can change the values of up to 85 consecutive locations at a time (or even more, if you omit leading zeros from the values) by typing only the initial address and colon followed by all the values separated by spaces, and ending with Return. The Monitor will duly store the consecutive values in consecutive locations, starting at the location whose address you typed. After it has processed the string of values, it takes the location following the last changed location as the next changeable location. Thus, you can continue changing consecutive locations without typing an address on the next input line by typing another colon and more values. In these examples, you first change some locations, then examine them to verify the changes:

```
*300:69 01 20 ED FD 4C 0 3

*300

0300- 69

*Return

01 20 ED FD 4C 00 03

*10:0 1 2 3

*:4 5 6 7

*10.17

0010- 00 01 02 03 04 05 06 07
*
```

ASCII input mode

The enhanced Apple IIe has an ASCII input mode that lets you enter ASCII characters just as you can their hexadecimal ASCII equivalents by preceding the literal character with an apostrophe (') . This means that 'A is the same as $C1 and 'B is the same as $C2 to the Monitor. The ASCII value for *any* character following an apostrophe is used by the Monitor.

Each character to be placed in memory should be delimited by a leading apostrophe (') and a trailing space. The only exception to this rule is that the last character in the line is followed with a return character instead of a space. The following example would enter the string "Hooray for sushi!" at $0300 in memory.

```
*300:'H 'o 'o 'r 'a 'y ' 'f 'o 'r ' 's 'u 's 'h 'i '!
```

Important ASCII input mode sets the high bit of the code for a character that you enter. So 'A will equal $C1, not $41.

Original IIe The original Apple IIe does not have an ASCII input mode.

Moving data in memory

You can copy a block of data stored in a range of memory locations from one area in memory to another by using the Monitor's MOVE command. To move a range of memory, you must tell the Monitor both where the data is now situated in memory (the source locations) and where you want the copy to go (the destination locations). You give this information to the Monitor by means of three addresses: the address of the first location in the destination and the addresses of the first and last locations in the source. You specify the starting and ending addresses of the source range by separating them with a period. You separate the destination address from the range addresses with a less-than character (<), which you may think of as an arrow pointing in the direction of the move. Finally, you tell the Monitor that this is a MOVE command by typing the letter *M* (in either lowercase or uppercase). The format of the complete MOVE command looks like this:

{*destination*} < {*start*} . {*end*} M

When you type the actual command, the words in braces should be replaced by hexadecimal addresses, and the braces and spaces should be omitted.

Here are some examples of Monitor commands, including some memory moves. First, you examine the values stored in one range of memory, then store several values in another range of memory; the actual MOVE commands end with the letter *M*.

```
* 0.F

0000- 5F 00 05 07 00 00 00 00
0008- 00 00 00 00 00 00 00 00

*300:A9 8D 20 ED FD A9 45 20 DA FD 4C 00 03

*300.30C

0300- A9 8D 20 ED FD A9 45 20
0308- DA FD 4C 00 03

*0<300.30CM

*0.C

0000- A9 8D 20 ED FD A9 45 20
0008- DA FD 4C 00 03

*310<8.AM

*310.312

0310- DA FD 4C

*2<7.9M

*0.C

0000- A9 8D 20 DA FD A9 45 20
0008- DA FD 4C 00 03
*
```

The Monitor moves a copy of the data stored in the source range of locations to the destination locations. The values in the source range are left undisturbed. The Monitor remembers the last location in the source range as the last opened location, and the first location in the source range as the next changeable location. If the second address in the source range specification is less than the first, then only one value (that of the first location in the range) will be moved.

If the destination address of the MOVE command is inside the source range of addresses, then strange (and sometimes wonderful) things happen: the locations between the beginning of the source range and the destination address are treated as a subrange and the values in this subrange are replicated throughout the source range.

See the section "Special Tricks With the Monitor" later in this chapter for an interesting application of this feature.

Comparing data in memory

You can use the VERIFY command to compare two ranges of memory using the same format you use to move a range of memory from one place to another. In fact, the VERIFY command can be used immediately after a MOVE command to make sure that the move was successful.

The VERIFY command, like the MOVE command, needs a range and a destination. The syntax of the VERIFY command is

{*destination*} < {*start*} . {*end*} V

The Monitor compares the values in the source locations with the values in the locations beginning at the destination address. If any values don't match, the Monitor displays the address at which the discrepancy was found and the two values that differ. In the example, you store data values in the range of locations from 0 to $D, copy them to locations starting at $300 with the MOVE command, and then compare them using the VERIFY command. When you use the VERIFY command after you change the value at location 6 to $E4, it detects the change.

```
*0:D7 F2 E9 F4 F4 E5 EE A0 E2 F9 A0 C3 C4 C5

*300<0.DM

*300<0.DV

*6:E4

*300<0.DV

0006-E4  (EE)
*
```

If the VERIFY command finds a discrepancy, it displays the address of the location in the source range whose value differs from its counterpart in the destination range. If there is no discrepancy, VERIFY displays nothing. The VERIFY command leaves the values in both ranges unchanged. The last opened location is the last location in the source range, and the next changeable location is the first location in the source range, just as in the MOVE command. If the ending address of the range is less than the starting address, the values of only the first locations in the ranges will be compared. Like the MOVE command, the VERIFY command also does unusual things if the destination address is within the source range.

See the section "Special Tricks With the Monitor" later in this chapter.

Searching for bytes in memory

The SEARCH command lets you search for one or two bytes (either hexadecimal values or ASCII characters) in a range of memory. You must type in the ASCII string (or hexadecimal number or numbers) in reverse of the order that they appear in memory. Think of the SEARCH command as looking for items in a last-in, first-out queue.

The syntax of the SEARCH command is

{*value or ASCII*}<{*start*}.{*end*} S

If the byte (or two-byte sequence) that you specify is in the specified memory range, the Monitor will return with a list of the addresses where that byte (or byte sequence) occurs. If the byte (or byte sequence) is not in the range, the Monitor just displays the prompt

The following example looks for the character string "LO" in memory between $0300 and $03FF:

```
*'O'L<300.3FFS
```

- *High bit set:* Remember that ASCII input mode sets the high-order bit of each character that you enter.

The next example searches for the two-byte sequence $FF11.

```
*11FF<300.3FFS
```

You can't search for a two-byte sequence with a high byte of 0. The Monitor ignores the high byte and searches for the low byte only. The sequence 00FF is seen by the Monitor SEARCH command as FF.

Original IIe The Monitor in the original Apple IIe does not recognize the SEARCH command.

Examining and changing registers

The microprocessor's register contents change continuously whenever the Apple IIe is running any sort of program, such as the Monitor. The Monitor lets you see what the register contents were when you invoked the Monitor or a program that you were debugging stopped at a break (BRK). The Monitor also lets you set 65C02 register values before you execute a program with the GO command.

When you call the Monitor, it stores the contents of the microprocessor's registers in memory. The registers are stored in the order A, X, Y, P (processor status register), and S (stack pointer), starting at location $45 (decimal 69). When you give the Monitor a GO command, the Monitor loads the registers from these five locations before it executes the first instruction in your program.

Pressing Control-E and then Return invokes the Monitor's EXAMINE command, which displays the stored register values and sets the location containing the contents of the A register as the next changeable location. After using the EXAMINE command, you can change the values in these locations by typing a colon and then typing the new values separated by spaces. In the following example, you display the registers, change the first two, and then display them again to verify the change.

```
*Control-E

A=0A X=FF Y=D8 P=B0 S=F8

*:B0 02

*Control-E

A=B0 X=02 Y=D8 P=B0 S=F8
*
```

Monitor cassette tape commands

The Apple IIe has two jacks for connecting an audio cassette tape recorder. With a recorder connected, you can use the Monitor commands described later in this section to save the contents of a range of memory onto a standard cassette and recall it for later use.

Saving data on tape

The Monitor's WRITE command saves the contents of up to 65,536 memory locations on cassette tape. To save a range of memory on tape, give the Monitor the starting and ending addresses of the range, followed by the letter *W* (for WRITE), like this:

{*start*} . {*end*} W

Don't press Return yet: first, put the tape recorder in record mode and let the tape run for a second, then press Return. The Monitor will write a ten-second tone onto the tape and then write the data. The tone acts as a leader: later, when the Monitor reads the tape, the leader enables the Monitor to get in step with the signal from the tape. When the Monitor is finished writing the range you specified, it will sound a bell (beep) and display a prompt. You should rewind the tape and label it with the memory range that's on the tape and what it's supposed to be.

Here's a small example you can save and use later to try out the READ command. Remember that you must start the cassette recorder in record mode before you press Return after typing the WRITE command.

```
*0.FF FF AD 30 C0 88 D0 04 C6 01 F0 08 CA

D0 F6 A6 00 4C 02 00 60

*0.14

0000- FF FF AD 30 C0 88 D0 04
0008- C6 01 F0 08 CA D0 F6 A6
0010- 00 4C 02 00 60

*0.14W

*
```

It takes about 35 seconds total to save the values of 4096 memory locations preceded by the ten-second leader onto tape. This works out to an average data transfer rate of about 1350 bits per second.

The WRITE command writes one extra value on the tape after it has written the values in the memory range. This extra value is the checksum, which is the eight-bit partial sum of all values in the range. When the Monitor reads the tape, it uses this value to determine if the data has been written and read correctly. (See the next section.)

Reading data from tape

Once you've saved a memory range onto tape with the Monitor's WRITE command, you can read that memory range back into the computer by using the Monitor's READ command. The data values you've stored on the tape need not be read back into the same memory range from whence they came; you can tell the Monitor to put those values into any memory range in the computer's memory, provided that it's the same size as the range you saved.

The format of the READ command is the same as that of the WRITE command, except that the command letter is *R:*

{*start*} . {*end*} R

Once again, after typing the command, don't press Return. Instead, start the tape recorder in play mode and wait a few seconds. Although the WRITE command puts a ten-second leader tone on the beginning of the tape, the READ command needs only three seconds of this leader to lock on to the signal from the tape. You should let a few seconds of tape go by before you press Return to allow the tape recorder's output to settle down to a steady tone.

This example has two parts. First, you set a range of memory to zero, verify the contents of memory, and then type the READ command (but don't press Return).

```
*0:0 0 0 0 0 0 0 0 0 0 0 0 0 0 0 0 0 0 0 0
*0.14
0000- 00 00 00 00 00 00 00 00
0008- 00 00 00 00 00 00 00 00
0010- 00 00 00 00 00
0.14R
```

Now start the cassette running in play mode, wait a few seconds, and press Return. After the Monitor sounds the bell (beep) and displays the prompt, examine the range of memory to see that the values from the tape were read correctly.

```
*0.14
0000- FF FF AD 30 C0 88 D0 04
0008- C6 01 F0 08 CA D0 F6 A6
0010- 00 4C 02 00 60
*
```

After the Monitor has read all the data values on the tape, it reads the checksum value. It computes the checksum on the data it read and compares it to the checksum from the tape. If the two checksums differ, the Monitor sends a beep to the speaker and displays ERR. This warns you that there was a problem reading the tape and that the values stored in memory aren't the values that were recorded on the tape. If the two checksums match, the Monitor will just send out a beep and display a prompt.

Miscellaneous Monitor commands

These Monitor commands enable you to change the video display format from normal to inverse and back, and to assign input and output to accessories in expansion slots.

Inverse and normal display

You can control the setting of the inverse-normal mask location used by the COUT subroutine (described in Chapter 3) from the Monitor so that all of the Monitor's output will be in inverse format. The INVERSE command, I, sets the mask such that all subsequent inputs and outputs are displayed in inverse format. To switch the Monitor's output back to normal format, use the NORMAL command, N.

```
*0.F

0000- 0A 0B 0C 0D 0E 0F D0 04
0008- C6 01 F0 08 CA D0 F6 A6

*I

*0.F

0000- 0A 0B 0C 0D 0E 0F D0 04
0008- C6 01 F0 08 CA D0 F6 A6

*N

*0.F

0000- 0A 0B 0C 0D 0E 0F D0 04
0008- C6 01 F0 08 CA D0 F6 A6
*
```

Back to BASIC

Use the BASIC command, Control-B, to leave the Monitor and enter the BASIC that was active when you entered the Monitor. Normally, this is Applesoft BASIC, unless you deliberately switched to Integer BASIC. Any program or variables that you had previously in BASIC will be lost. If you want to reenter BASIC with your previous program and variables intact, use the CONTINUE BASIC command, Control-C.

If you are using DOS 3.3 or ProDOS, press Control-Reset or type `3D0G` to return to the language you were using, with your program and variables intact.

- *That's a number, not a letter:* If you use 3DOG, make sure that the third character you type is a zero, not a letter *O*. The letter *G* is the Monitor's GO command, described in the section "Machine-Language Programs" later in this chapter.

Redirecting input and output

The PRINTER command, activated by Control-P, diverts all output normally destined for the screen to an interface card in a specified expansion slot, from 1 to 7. There must be an interface card in the specified slot, or you will lose control of the computer and your program and variables may be lost. The format of the command is

{*slot number*} Control-P

A PRINTER command to slot number 0 will switch the stream of output characters back to the Apple IIe's video display.

Warning Don't give the PRINTER command with slot number 0 to deactivate the 80-column firmware, even though you used this command to activate it in slot 3. The command works, but it just disconnects the firmware, leaving some of the soft switches set for 80-column display.

In much the same way that the PRINTER command switches the output stream, the KEYBOARD command substitutes the interface card in a specified expansion slot for the Apple IIe's normal input device, the keyboard. The format for the KEYBOARD command is

{*slot number*} Control-K

A slot number of 0 for the KEYBOARD command directs the Monitor to accept input from the Apple IIe's built-in keyboard.

The PRINTER and KEYBOARD commands are the exact equivalents of the BASIC commands PR# and IN#.

Hexadecimal arithmetic

The Monitor will also perform one-byte hexadecimal addition and subtraction. Just type a line in one of these formats:

{*value*} + {*value*} {*value*} – {*value*}

The Apple IIe performs the arithmetic and displays the result, as shown in these examples:

```
*20+13

=33

*4A-C

=3E

*FF+4 =

03

*3-4

=FF
*
```

Special tricks with the Monitor

This section describes some more complex ways of using the Monitor commands.

Multiple commands

You can put as many Monitor commands on a single line as you like, as long as you separate them with spaces and the total number of characters in the line is less than 254. Adjacent single-letter commands such as L, S, I, and N need not be separated by spaces.

You can freely intermix all the commands except the STORE (:) command. Since the Monitor takes all values following a colon and places them in consecutive memory locations, the last value in a STORE must be followed by a letter command before another address is encountered. You can use the NORMAL command as the required letter command in such cases; it usually has no effect and can be used anywhere.

In the following example, you display a range of memory, change it, and display it again, all with one line of commands:

```
*300.307 300:18 69 1 N 300.302

0300- 00 00 00 00 00 00 00 00
0300- 18 69 01
*
```

If the Monitor encounters a character in the input line that it does not recognize as either a hexadecimal digit or a valid command character, it executes all the commands on the input line up to that character, then grinds to a halt with a noisy beep and ignores the remainder of the input line.

Filling memory

The MOVE command can be used to replicate a pattern of values throughout a range of memory. To do this, first store the pattern in the first locations in the range.

```
*300:11 22 33
```

Remember the number of values in the pattern: in this case, it is three. Use the number to compute addresses for the MOVE command, like this:

{start+number} < {start} . {end–number} M

This MOVE command will first replicate the pattern at the locations immediately following the original pattern, then replicate that pattern following itself, and so on until it fills the entire range.

```
*303<300.32DM

*300.32F

0300- 11 22 33 11 22 33 11 22
0308- 33 11 22 33 11 22 33 11
0310- 22 33 11 22 33 11 22 33
0318- 11 22 33 11 22 33 11 22
0320- 33 11 22 33 11 22 33 11
0328- 22 33 11 22 33 11 22 33
*
```

You can do a similar trick with the VERIFY command to check whether a pattern repeats itself through memory. This is especially useful to verify that a given range of memory locations all contain the same value. In this example, you first fill the memory range from $0300 to $0320 with zeros and verify it, then change one location and verify again, to see the VERIFY command detect the discrepancy:

```
*300:0

*301<300.3lFM

*301<300.31FV

*304:02

*301<300.31FV

0303-00 (02) 0304-02 (00)
*
```

Repeating commands

You can create a command line that repeats one or more commands over and over. You do this by beginning the part of the command line that you want to repeat with a letter command, such as N, and ending it with the sequence 34:n, where n is a hexadecimal number that specifies the position in the line of the command where you want to start repeating; for the first character in the line, n=0. The value for n must be followed with a space in order for the loop to work properly.

This trick takes advantage of the fact that the Monitor uses an index register to step through the input buffer, starting at location $0200. Each time the Monitor executes a command, it stores the value of the index at location $34; when that command is finished, the Monitor reloads the index register with the value at location $34. By making the last command change the value at location $34, you change this index so that the Monitor picks up the next command character from an earlier point in the buffer.

The only way to stop a loop like this is to press Control-Reset; that is how this example ends.

```
*N 300 302 34:0

0300- 11
0302- 33
0300- 11
0302- 33
0300- 11
0302- 33
0300- 11
0302- 33
0300- 11
0302- 33
0300- 11
0302- 33
030
*
```

Creating your own commands

The USER command, Control-Y, forces the Monitor to jump to memory location $03F8. You can put a JMP instruction there that jumps to your own machine-language program. Your program can then examine the Monitor's registers and pointers or the input buffer itself to obtain its data. For example, here is a program that displays everything on the input line after the Control-Y. The program starts at location $0300; the command line that starts with $03F8 stores a jump to $0300 at location $03F8.

```
*300:A4 34 B9 00 02 20 ED FD C8 C9 8D D0 F5 4C 69 FF

*378:4C 00 03

*Control-Y THIS IS A TEST

THIS IS A TEST
*
```

Machine-language programs

The main reason to program in machine language is to get more speed. A program in machine language can run much faster than the same program written in high-level languages such as BASIC or Pascal, but the machine-language version usually takes a lot longer to write. There are other reasons to use machine language: you might want your program to do something that isn't included in your high-level language, or you might just enjoy the challenge of using machine language to work directly on the bits and bytes.

- *Boning up on machine language:* If you have never used machine language before, you'll need to learn the 65C02 instructions listed in Appendix A. To become proficient at programming in machine language, you'll have to spend some time at it and study at least one of the books on 6502 programming listed in the bibliography. With the books and Appendix A, you'll have the needed information to program the 65C02.

You can get a hexadecimal dump of your program, move it around in memory, or save it on tape and recall it using the commands described in the previous sections. The Monitor commands in this section are intended specifically for you to use in creating, writing, and debugging machine-language programs.

Running a program

The Monitor command you use to start execution of your machine-language program is the GO command. When you type an address and the letter *G*, the Apple IIe starts executing machine language instructions starting at the specified location. If you just type G, execution starts at the last opened location. The Monitor treats this program as a subroutine: it should end with an RTS (return from subroutine) instruction to transfer control back to the Monitor.

The Monitor has some special features that make it easier for you to write and debug machine-language programs, but before you get into that, here is a small machine-language program that you can run using only the simple Monitor commands already described. The program in the example merely displays the letters *A* through *Z:* you store it starting at location $0300, examine it to be sure you typed it correctly, then type 300G to start it running.

```
*300:A9 C1 20 ED FD 18 69 1 C9 DB D0 F6 60

*300.30C

0300- A9 C1 20 ED FD 18 69 01
0308- C9 DB D0 F6 60

*300G ABCDEFGHIJKLMNOPQRSTUVWXYZ

*
```

Disassembled programs

Machine-language code in hexadecimal isn't the easiest thing in the world to read and understand. To make this job a little easier, machine-language programs are usually written in assembly language and converted into machine-language code by programs called **assemblers.**

Since programs that translate assembly language into machine language are called assemblers, a program like the Monitor's LIST command that translates machine language into assembly language is called a **disassembler.**

The Monitor's LIST command displays machine-language code in assembly-language form. Instead of unformatted hexadecimal gibberish, the LIST command displays each instruction on a separate line, with a three-letter instruction name, or **mnemonic,** and a formatted hexadecimal operand. The LIST command also converts the relative addresses used in branch instructions to absolute addresses.

The word **mnemonic** comes from the same root as *memory* and refers to short acronyms that are easier to remember than the hexadecimal operation codes themselves: for example, for *clear carry* you write CLC instead of $18.

The Monitor LIST command has the format

{*location*} L

The LIST command starts at the specified location and displays as much memory as it takes to make up a screenful (20 lines) of instructions, as shown in the following example:

```
*300L

0300-   A9 C1        LDA   #$C1
0302-   20 ED FD     JSR   $FDED
0306-   18           CLC
0306-   69 01        ADC   #$01
0308-   C9 DB        CMP   #$DB
030A-   D0 F6        BNE   $0302
030C-   60           RTS
030D-   00           BRK
030E-   00           BRK
030F-   00           BRK
0310-   00           BRK
0311-   00           BRK
0312-   00           BRK
0313-   00           BRK
0314-   00           BRK
0316-   00           BRK
0316-   00           BRK
0317-   00           BRK
0318-   00           BRK
0319-   00           BRK
*
```

The first seven lines of this example are the assembly-language form of the program you typed in the previous example. The rest of the lines are BRK instructions only if this part of memory has zeros in it: other values will be disassembled as other instructions.

The Monitor saves the address that you specify in the LIST command, but not as the last opened location used by the other commands. Instead, the Monitor saves this address as the program counter, which it uses only to point to locations within programs. Whenever the Monitor performs a LIST command, it sets the program counter to point to the location immediately following the last location displayed on the screen, so that if you type another LIST command it will display another screenful of instructions, starting where the previous display left off.

The Mini-Assembler

Without an assembler, you have to write your machine-language program, take the hexadecimal values for the opcodes and operands, and store them in memory using the commands covered in the previous sections. That is exactly what you did when you ran the previous examples.

The Monitor includes an assembler called the *Mini-Assembler* that lets you enter machine-language programs directly from the keyboard of your Apple. ASCII characters can be entered in Mini-Assembler programs, exactly as you enter them in the Monitor. Note that the Mini-Assembler doesn't accept labels; you must use actual values and addresses.

Starting the Mini-Assembler

To start the Mini-Assembler first invoke the Monitor by typing `CALL -151` and pressing Return, and then from the Monitor, type `!` followed by Return. The Monitor prompt character then changes from `*` to `!`.

When you finish using the Mini-Assembler, press Return from a blank line to return to the Monitor.

Restrictions

The Mini-Assembler supports only the subset of 65C02 instructions that are found on the 6502.

Original IIe

Before you can use the Mini-Assembler on the original Apple IIe, you have to be running Integer BASIC. When you start up the computer using DOS or either BASIC, the Apple IIe loads the Integer BASIC interpreter from the file named INTBASIC into the bank-switched RAM. Here's how to start the Mini-Assembler on an original Apple IIe:

1. Start Integer BASIC from DOS 3.3 by typing `INT` and pressing Return.
2. After the Integer prompt character (>) and a cursor appear, enter the Monitor by typing `CALL -151` and pressing Return.
3. Now start the Mini-Assembler by typing `F666G` and pressing Return.

Using the Mini-Assembler

The Mini-Assembler saves one address, that of the program counter. Before you start to type a program, you must set the program counter to point to the location where you want the Mini-Assembler to store your program. Do this by typing the address followed by a colon.

After the colon, type the mnemonic for the first instruction in your program, followed by a space and the operand of the instruction. Now press Return. The Mini-Assembler converts the line you typed into hexadecimal, stores it in memory beginning at the location of the program counter, and then disassembles it again and displays the disassembled line. It then displays a prompt on the next line.

Now the Mini-Assembler is ready to accept the second instruction in your program. To tell it that you want the next instruction to follow the first, don't type an address or a colon: just type a space and the next instruction's mnemonic and operand, then press Return. The Mini-Assembler assembles that line and waits for another.

Formats for operands are listed in Table 5-1.

```
!300:LDX #02
0300-   A2 02       LDX    #$02
! LDA $0,X
0302-   B5 00       LDA    $00,X
! STA $10,X
0304    95 10       STA    $10,X
! DEX
0306-   CA          DEX
! STA $C030
0307-   8D 30 C0    STA    $C030
! BPL $302
030A-   10 F6       BPL    $0302
! BRK
030C-   00          BRK
!
```

If the line you type has an error in it, the Mini-Assembler beeps loudly and displays a caret (^) under or near the offending character in the input line. Most common errors are the result of typographical mistakes: misspelled mnemonics, missing parentheses, and so forth. The Mini-Assembler also rejects the input line if you forget the space before or after a mnemonic or include an extraneous character in a hexadecimal value or address. If the destination address of a branch instruction is out of the range of the branch (more than 127 locations distant from the address of the instruction), the Mini-Assembler flags this as an error.

There are several different ways to leave the Mini-Assembler and reenter the Monitor. On an enhanced Apple IIe only, simply press Return at a blank line.

Original IIe On an original Apple IIe, type the Monitor command `$FF69G`.

On any Apple IIe, you can press Control-Reset, which forces a warm restart of BASIC, then type `CALL -151`.

Your assembly-language program is now stored in memory. You can display it with the LIST command:

```
*300l
0300-  A2 02        LDX   #$02
0302-  B5 00        LDA   $00,X
0304-  95 10        STA   $10,X
0306-  CA           DEX
0307-  8D 30 C0     STA   $C030
030A-  10 F6        BPL   $0302
030C-  00           BRK
030D-  00           BRK
030E-  00           BRK
030F-  00           BRK
0310-  00           BRK
0311-  00           BRK
0312-  00           BRK
0313-  00           BRK
0314-  00           BRK
0316-  00           BRK
0316-  00           BRK
0317-  00           BRK
0318-  00           BRK
0319-  00           BRK
*
```

Mini-Assembler instruction formats

See Appendix A for more information about 65C02 (and 6502) instructions.

The Apple Mini-Assembler recognizes 56 mnemonics and 13 addressing formats. These constitute the 6502 subset of the 65C02 instruction set. The mnemonics are standard, as used in the *Synertek Programming Manual* (Apple part number A2L0003), but the addressing formats are somewhat different. Table 5-1 shows the Apple standard address-mode formats for 6502 assembly language.

Table 5-1
Mini-Assembler address formats

Addressing mode	Format
Accumulator	*
Implied	*
Immediate	#${*value*}
Absolute	${*address*}
Zero page	${*address*}
Indexed zero page	${*address*},X ${*address*},Y
Indexed absolute	${*address*},X ${*address*},Y
Relative	${*address*}
Indexed indirect	(${*address*},X)
Indirect indexed	(${*address*}),Y
Absolute indirect	(${*address*})

* These instructions have no operands.

An address consists of one or more hexadecimal digits. The Mini-Assembler interprets addresses the same way the Monitor does: if an address has fewer than four digits, the Mini-Assembler adds leading zeros; if the address has more than four digits, then it uses only the last four.

- *Dollar signs:* In this manual, dollar signs ($) in addresses signify that the addresses are in hexadecimal notation. They are ignored by the Mini-Assembler and may be omitted when typing programs.

There is no syntactical distinction between the absolute and zero-page addressing modes. If you give an instruction to the Mini-Assembler that can be used in both absolute and zero-page mode, the Mini-Assembler assembles that instruction in absolute mode if the operand for that instruction is greater than $FF, and it assembles it in zero-page mode if the operand is less than $0100.

Instructions in accumulator mode and implied addressing mode need no operands.

Branch instructions, which use the relative addressing mode, require the target address of the branch. The Mini-Assembler calculates the relative distance to use in the instruction automatically. If the target address is more than 127 locations distant from the instruction, the Mini-Assembler sounds a bell (beep), displays a caret (^) under the target address, and does not assemble the line.

If you give the Mini-Assembler the mnemonic for an instruction and an operand, and the addressing mode of the operand cannot be used with the instruction you entered, the Mini-Assembler will not accept the line.

Summary of Monitor commands

Here is a summary of the Monitor commands, showing the syntax for each one.

Examining memory

{*adrs*}	Examines the value contained in one location.
{*adrs1*}.{*adrs2*}	Displays the values contained in all locations between {*adrs1*} and {*adrs2*}.
Return	Displays the values in up to eight locations following the last opened location.

Changing the contents of memory

{*adrs*}:{*val*} {*val*}	Stores the values in consecutive memory locations starting at {*adrs*}.
:{*val*}{*val*}...	Stores values in memory starting at the next changeable location.

Moving and comparing

{*dest*}<{*start*}.{*end*}M	Copies the values in the range {*start*}.{*end*} into the range beginning at {*dest*}.
{*dest*}<{*start*}.{*end*}V	Compares the values in the range {*start*}.{*end*} to those in the range beginning at {*dest*}.

The Examine command

Control-E	Displays the locations where the contents of the 65C02's registers are stored and opens them for changing.

The Search command

{*val*}<{*start*}.{*end*}S	Displays the address of the first occurrence of {*val*} in the specified range beginning at {*start*}.

Cassette tape commands

{*start*}.{*end*}W	Writes the values in the memory range {*start*}.{*end*} onto tape, preceded by a ten-second leader.
{*start*}.{*end*}R	Reads values from tape, storing them in memory beginning at {*start*} and stopping at {*end*}. Prints ERR if an error occurs.

Miscellaneous Monitor commands

I	Sets inverse display mode.
N	Sets normal display mode.
Control-B	Enters the language currently active (usually Applesoft).
Control-C	Returns to the language currently active (usually Applesoft).
{*val*}+{*val*}	Adds the two values and prints the hexadecimal result.
{*val*}–{*val*}	Subtracts the second value from the first and prints the result.
{*slot*} Control-P	Diverts output to the device whose interface card is in slot number {*slot*}. If {*slot*}=0, accepts input from the keyboard.
Control-Y	Jumps to the machine-language subroutine at location $3F8.

Running and listing programs

{*adrs*}G	Transfers control to the machine language program beginning at {*adrs*}.
{*adrs*}L	Disassembles and displays 20 instructions, starting at {*adrs*}. Subsequent LIST commands display 20 more instructions.

The Mini-Assembler

Original IIe The Mini-Assembler is available on an original Apple IIe only when Integer BASIC is active. See the earlier section "The Mini-Assembler."

F666G	Invokes the Mini-Assembler on the original Apple IIe.
!	Invokes the Mini-Assembler on the enhanced Apple IIe.
${*command*}	Executes a Monitor command from the Mini-Assembler on the original Apple IIe.
$FF69g	Leaves the Mini-Assembler on the original Apple IIe.
Return	Leaves the Mini-Assembler on the enhanced Apple IIe.

Chapter 6

Programming for Peripheral Cards

The seven expansion slots on the Apple IIe's main circuit board are used for installing circuit cards containing the hardware and firmware needed to interface peripheral devices to the Apple IIe. These slots are not simple I/O ports; peripheral cards can access the Apple IIe's data, address, and control lines via these slots. The expansion slots are numbered from 1 to 7, and certain signals, described below, are used to select a specific slot.

Apple II and II Plus

The Apple II and Apple II Plus have an eighth expansion slot: slot number 0. On those models, slot 0 is normally used for a language card or a ROM card; the functions of the Apple II Language Card are built into the main circuit board of the Apple IIe.

Interrupt support on the enhanced Apple IIe requires that special attention be paid to cards designed to be in slot 3. A description of what you need to watch for is given at the end of this chapter.

Original IIe

The interrupt support built into the enhanced (and extended keyboard) Apple IIe is an enhanced and expanded version of the interrupt support in the original Apple IIe.

Peripheral-card memory spaces

Because the Apple IIe's microprocessor does all of its I/O through memory locations, portions of the Apple IIe's memory space have been allocated for the exclusive use of the cards in the expansion slots. In addition to the memory locations used for actual I/O, there are memory spaces available for programmable memory (RAM) in the main memory and for read-only memory (ROM or PROM) on the peripheral cards themselves.

The memory spaces allocated for the peripheral cards are described below. Those memory spaces are used for small dedicated programs such as I/O drivers. Peripheral cards that contain their own driver routines in firmware like this are called *intelligent peripherals*. They make it possible for you to add peripheral hardware to your Apple IIe without having to change your programs, provided that your programs follow normal practice for data input and output.

Table 6-1
Peripheral-card I/O memory locations enabled by DEVICE SELECT'

Slot	Locations
1	$C090–$C09F
2	$C0A0–$C0AF
3	$C0B0–$C0BF
4	$C0C0–$C0CF
5	$C0D0–$C0DF
6	$C0E0–$C0EF
7	$C0F0–$C0FF

Signals for which the active state is low are marked with a prime (').

Peripheral-card I/O space

Each expansion slot has the exclusive use of 16 memory locations for data input and output in the memory space beginning at location $C090. Slot 1 uses locations $C090 through $C09F, slot 2 uses locations $C0A0 through $C0AF, and so on through location $C0FF, as shown in Table 6-1.

These memory locations are used for different I/O functions, depending on the design of each peripheral card. Whenever the Apple IIe addresses one of the 16 I/O locations allocated to a particular slot, the signal on pin 41 of that slot, named DEVICE SELECT', switches to the active (low) state. This signal can be used to enable logic on the peripheral card that uses the 4 low-order address lines to determine which of its 16 I/O locations is being accessed.

Table 6-2
Peripheral-card ROM memory locations enabled by I/O SELECT'

Slot	Locations
1	$C100–$C1FF
2	$C200–$C2FF
3	$C300–$C3FF
4	$C400–$C4FF
5	$C500–$C5FF
6	$C600–$C6FF
7	$C700–$C7FF

Peripheral-card ROM space

One 256-byte page of memory space is allocated to each accessory card. This space is normally used for read-only memory (ROM or PROM) on the card with driver programs that control the operation of the peripheral device connected to the card.

The page of memory allocated to each expansion slot begins at location $Cn00, where n is the slot number, as shown in Table 6-2 and Figure 6-3. Whenever the Apple IIe addresses one of the 256 ROM memory locations allocated to a particular slot, the signal on pin 1 of that slot, named I/O SELECT', switches to the active (low) state. This signal enables the ROM or PROM devices on the card, and the eight low-order address lines determine which of the 256 memory locations is being accessed.

Expansion ROM space

In addition to the small areas of ROM memory allocated to each expansion slot, peripheral cards can use the 2K-byte memory space from $C800 to $CFFF for larger programs in ROM or PROM. This memory space is called *expansion ROM space.* (See the memory map in Figure 6-3.) Besides being larger, the expansion ROM memory space is always at the same locations regardless of which slot is occupied by the card, making programs that occupy this memory space easier to write.

See the section "I/O Programming Suggestions" later in this chapter.

This memory space is available to any peripheral card that needs it. More than one peripheral card can have expansion ROM on it, but only one of them can be active at a time.

Each peripheral card that uses expansion ROM must have a circuit on it to enable the ROM. The circuit does this by a two-stage process: first, it sets a flip-flop when the I/O SELECT' signal, pin 1 on the slot, becomes active (low); second, it enables the expansion ROM devices when the I/O STROBE' signal, pin 20 on the slot, becomes active (low). Figure 6-1 shows a typical ROM-enable circuit.

The I/O SELECT' signal on a particular slot becomes active whenever the Apple IIe's microprocessor addresses a location in the 256-byte ROM address space allocated to that slot. The I/O STROBE' signal on all of the expansion slots becomes active (low) when the microprocessor addresses a location in the expansion-ROM memory space, $C800–$CFFF. The I/O STROBE' signal is used to enable the expansion-ROM devices on a peripheral card. (See Figure 6-1.)

Important If there is an 80-column text card installed in the auxiliary slot, some of the functions normally associated with slot 3 are performed by the 80-column text card and the built-in 80-column firmware. With the 80-column text card installed, the I/O STROBE' signal is not available on slot 3, so firmware in expansion ROM on a card in slot 3 will not run.

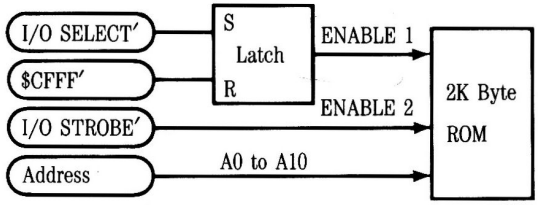

Figure 6-1
Expansion ROM enable circuit

A program on a peripheral card can get exclusive use of the expansion ROM memory space by referring to location $CFFF in its initialization phase. This location is special: all peripheral cards that use expansion ROM must recognize a reference to $CFFF as a signal to reset their ROM-enable flip-flops and disable their expansion ROMs. Of course, doing so also disables the expansion ROM on the card that is about to use it, but the next instruction in the initialization code sets the flip-flop in the expansion-ROM enable circuit on the card.

A card that needs to use the expansion ROM space must first insert its slot address ($Cn) in $07F8 before it refers to $CFFF. This allows interrupting devices to reenable the card's expansion ROM after interrupt handling is finished. Once its slot address has been inserted in $07F8, the peripheral card has exclusive use of the expansion memory space and its program can jump directly into the expansion ROM.

As described earlier, the expansion-ROM disable circuit resets the enable flip-flop whenever the 65C02 addresses location $CFFF. To do this, the peripheral card must detect the presence of $CFFF on the address bus. You can use the I/O STROBE' signal for part of the address decoding, since it is active for addresses from $C800 through $CFFF. If you can afford to sacrifice some ROM space, you can simplify the address decoding even further and save circuitry on the card. For example, if you give up the last 256 bytes of expansion ROM space, your disable circuit only needs to detect addresses of the form $CFxx, and you can use the minimal disable-decoding circuitry shown in Figure 6-2.

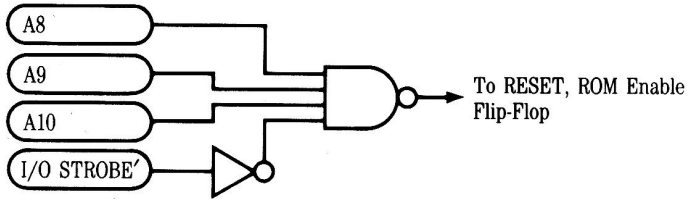

Figure 6-2
ROM disable address decoding

Important Applesoft addresses two locations in the $CFxx space, thereby resetting the enable flip-flop. If your peripheral device is going to be used with Applesoft programs, you must either use the full address decoding or else enable the expansion ROM each time it is needed.

Peripheral-card RAM space

There are 56 bytes of main memory allocated to the peripheral cards, eight bytes per card, as shown in Table 6-3. These 56 locations are actually in the RAM memory reserved for the text and low-resolution graphics displays, but these particular locations are not displayed on the screen and their contents are not changed by the built-in output routine COUT1. Programs in ROM on peripheral cards use these locations for temporary data storage.

Table 6-3
Peripheral-card RAM memory locations

Base address	Slot number						
	1	2	3*	4	5	6	7
$0478	$0479	$047A	$047B*	$047C	$047D	$047E	$047F
$04F8	$04F9	$04FA	$04FB*	$04FC	$04FD	$04FE	$04FF
$0578	$0579	$057A	$057B*	$057C	$057D	$057E	$057F
$05F8	$05F9	$05FA	$05FB*	$05FC	$05FD	$05FE	$05FF
$0678	$0679	$067A	$067B*	$067C	$067D	$067E	$067F
$06F8	$06F9	$06FA	$06FB*	$06FC	$06FD	$06FE	$06FF
$0778	$0779	$077A	$077B*	$077C	$077D	$077E	$077F
$07F8	$07F9	$07FA	$07FB*	$07FC	$07FD	$07FE	$07FF

* If there is a card in the auxiliary slot, it takes over these locations.

A program on a peripheral card can use the eight base addresses shown in the table to access the eight RAM locations allocated for its use, as shown in the next section, "I/O Programming Suggestions."

Warning The Apple IIe firmware sets the value of $04FB to $FF on a reset, even if there is no 80-column card installed.

I/O programming suggestions

A program in ROM on a peripheral card should work no matter which slot the card occupies. If the program includes a jump to an absolute location in one of the 256-byte memory spaces, then the card will work only when it is plugged into the slot that uses that memory space. If you are writing the program for a peripheral card that will be used by many people, you should avoid placing such a restriction on the use of the card.

Important To function properly no matter which slot a peripheral card is installed in, the program in the card's 256-byte memory space must not make any absolute references to itself. Instead of using jump instructions, you should force conditions on branch instructions, which use relative addressing.

The first thing a peripheral card used as an I/O device must do when called is to save the contents of the Apple IIe's microprocessor's registers. (Peripheral cards not being used as I/O devices do not need to save the registers.) The device should save the register's contents on the stack, and restore them just before returning control to the calling program. If there is RAM on the peripheral card, the information may be stored there.

Most single-character I/O is done via the microprocessor's accumulator. A character being output through your subroutine will be in the accumulator with its high bit set when your subroutine is called. Likewise, if your subroutine is performing character input, it must leave the character in the accumulator with its high bit set when it returns to the calling program.

Finding the slot number with ROM switched in

The memory addresses used by a program on a peripheral card differ depending on which expansion slot the card is installed in. Before it can refer to any of those addresses, the program must somehow determine the correct slot number. One way to do this is to execute a JSR (jump to subroutine) to a location with an RTS (return from subroutine) instruction in it, and then derive the slot number from the return address saved on the stack, as shown in the following example.

```
PHP                 ; save status
SEI                 ; inhibit interrupts
JSR KNOWNRTS        ; ->a known RTS instruction
                    ;...that you set up
TSX                 ; get high byte of the
LDA $0100,X         ; ...return address from stack
AND #$0F            ; low-order digit is slot no.
PLP                 ; restore status
```

The slot number can now be used in addressing the memory allocated to the peripheral card, as shown in the next section.

I/O addressing

Once your peripheral-card program has the slot number, the card can use the number to address the I/O locations allocated to the slot. Table 6-4 shows how these locations are related to 16 base addresses starting with $C080. Notice that the difference between the base address and the desired I/O location has the form $n0, where n is the slot number. Starting with the slot number in the accumulator, the following example computes this difference by four left shifts, then loads it into an index register and uses the base address to specify one of 16 I/O locations.

```
ASL                         ; get n into
ASL                         ;
ASL                         ;
ASL                         ; ...high-order nybble
TAX                         ; ...of index register
LDA     $C080,X     ; load from first I/O location
```

- *Selecting your target:* You must make sure that you get an appropriate value into the index register when you address I/O locations this way. For example, starting with 1 in the accumulator, the instructions in the above example perform an LDA from location $C090, the first I/O location allocated to slot 1. If the value in the accumulator had been 0, the LDA would have accessed location $C080, thereby setting the soft switch that selects the second bank of RAM at location $D000 and enables it for reading.

See the section "Setting Bank Switches" in Chapter 4 for more information.

Table 6-4
Peripheral-card I/O base addresses

Base address	Connector number						
	1	2	3	4	5	6	7
$C080	$C090	$C0A0	$C0B0	$C0C0	$C0D0	$C0E0	$C0F0
$C081	$C091	$C0A1	$C0B1	$C0C1	$C0D1	$C0E1	$C0F1
$C082	$C092	$C0A2	$C0B2	$C0C2	$C0D2	$C0E2	$C0F2
$C083	$C093	$C0A3	$C0B3	$C0C3	$C0D3	$C0E3	$C0F3
$C084	$C094	$C0A4	$C0B4	$C0C4	$C0D4	$C0E4	$C0F4
$C085	$C095	$C0A5	$C0B5	$C0C5	$C0D5	$C0E5	$C0F5
$C086	$C096	$C0A6	$C0B6	$C0C6	$C0D6	$C0E6	$C0F6
$C087	$C097	$C0A7	$C0B7	$C0C7	$C0D7	$C0E7	$C0F7
$C088	$C098	$C0A8	$C0B8	$C0C8	$C0D8	$C0E8	$C0F8
$C089	$C099	$C0A9	$C0B9	$C0C9	$C0D9	$C0E9	$C0F9

Table 6-4 (continued)
Peripheral-card I/O base addresses

Base address	Connector number 1	2	3	4	5	6	7
$C08A	$C09A	$C0AA	$C0BA	$C0CA	$C0DA	$C0EA	$C0FA
$C08B	$C09B	$C0AB	$C0BB	$C0CB	$C0DB	$C0EB	$C0FB
$C08C	$C09C	$C0AC	$C0BC	$C0CC	$C0DC	$C0EC	$C0FC
$C08D	$C09D	$C0AD	$C0BD	$C0CD	$C0DD	$C0ED	$C0FD
$C08E	$C09E	$C0AE	$C0BE	$C0CE	$C0DE	$C0EE	$C0FE
$C08F	$C09F	$C0AF	$C0BF	$C0CF	$C0DF	$C0EF	$C0FF

RAM addressing

A program on a peripheral card can use the eight base addresses shown in Table 6-3 to access the eight RAM locations allocated for its use. The program does this by putting its slot number into the Y index register and using indexed addressing mode with the base addresses. The base addresses can be defined as constants because they are the same no matter which slot the peripheral card occupies.

If you start with the correct slot number in the accumulator (by using the example shown earlier), then the following example uses all eight RAM locations allocated to the slot:

```
TAY
LDA         $0478,Y
STA         $04F8,Y
LDA         $0578,Y
STA         $05F8,Y
LDA         $0678,Y
STA         $06F8,Y
LDA         $0778,Y
STA         $07F8,Y
```

Warning You must be very careful when you have your peripheral-card program store data at the base-address locations themselves since they are temporary storage locations; the RAM at those locations is used by the disk operating system. Always store the first byte of the ROM location of the expansion slot that is currently active ($Cn) in location $7F8, and the first byte of the ROM location of the slot holding the controller card for the startup disk drive in location $5F8.

Changing the standard I/O links

See "The Standard I/O Links" in Chapter 3.

There are two pairs of locations in the Apple IIe that are used for controlling character input and output. They are called the *I/O links*. In an Apple IIe running without a disk operating system, the I/O links normally contain the starting addresses of the standard input and output routines—KEYIN and COUT1 if the 80-column firmware is not active, BASICIN and BASICOUT if the 80-column is active. If a disk operating system is running, one or both of the links will hold the addresses of the operating system input and output routines.

The link at locations $36 and $37 (decimal 54 and 55) is called CSW, for *character output switch.* Individually, location $36 is called CSWL (CSW Low) and location $37 is called CSWH (CSW High). CSW holds the starting address of the subroutine the Apple IIe is currently using for single-character output. This address is normally $FDF0, the address of routine COUT1, or $C307, the address of BASICOUT.

COUT1 and BASICOUT are described in Chapter 3.

When you issue a PR#n from BASIC or an n Control-P from the Monitor, the Apple IIe changes this link address to the first address in the ROM memory space allocated to slot number n. That address has the form $Cn00. Subsequent calls for character output are thus transferred to the program on the peripheral card. That program can use the instruction sequences given above to find its slot number and use the I/O and RAM locations allocated to it. When it is finished, the program can execute an RTS (return from subroutine) instruction to return control to the calling program, or jump to the output routine COUT1 at location $FDF0 to display the output character (which must be in the accumulator) on the screen, then let COUT1 return to the calling program.

A similar link at locations $38 and $39 (decimal 56 and 57) is called KSW, for *keyboard input switch.* Individually, location $38 is called KSWL (KSW low) and location $39 is called KSWH (KSW high). KSW holds the starting address of the routine currently being used for single-character input. This address is normally $FD1B, the starting address of KEYIN, or $C305, the address of BASICIN.

KEYIN and BASICIN are described in Chapter 3.

When you issue an IN#n command from BASIC or an n Control-K from the Monitor, the Apple IIe changes this link address to $Cn00, the beginning of the ROM memory space that is allocated to slot number n. Subsequent calls for character input are thus transferred to the program on the accessory card. That program can use the instruction sequences given above to find its slot number and use the I/O and RAM locations allocated to it. The program should put the input character, with its high bit set, into the accumulator and execute an RTS instruction to return control to the program that requested input.

When a disk operating system (ProDOS or DOS 3.3) is running, one or both of the standard I/O links hold addresses of the operating system's input and output routines. The operating system has internal locations that hold the addresses of the character input and output routines that are currently active.

Important

If a program that is running with ProDOS or DOS 3.3 changes the standard link addresses, either directly or via IN# and PR# commands, the operating system is disconnected.

See the *ProDOS Technical Reference Manual* for more about using link addresses.

To avoid disconnecting the operating system each time a BASIC program initiates I/O to a slot, it should use either an IN# or a PR# command from inside a PRINT statement that starts with a Control-D character. For assembly-language programs, there is a DOS 3.3 subroutine call to use when changing the link addresses. After changing CSW or KSW, the program calls this subroutine at location $03EA (decimal 1002). The subroutine transfers the link address to a location inside the operating system and then restores the operating system address in the standard link location.

Refer to the section on input and output link registers in the *DOS Programmer's Manual* and the *ProDOS Technical Reference Manual* for further details.

Other uses of I/O memory space

The portion of memory space from location $C000 through $CFFF (decimal 49152 through 53247) is normally allocated to I/O and program memory on the peripheral cards, but there are two other functions that also use this memory space: the built-in self-test firmware and the 80-column display firmware. The soft switches that control the allocation of this memory space are described in the next section.

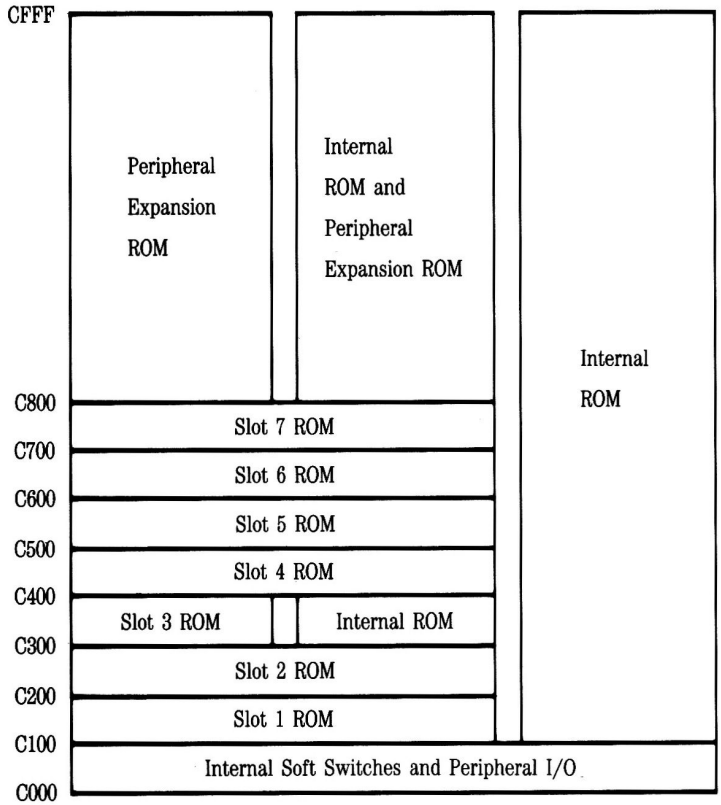

Figure 6-3
I/O memory map

Switching I/O memory

The built-in firmware uses two soft switches to control the allocation of the I/O memory space from $C000 to $CFFF. The locations of these soft switches, SLOTCXROM and SLOTC3ROM, are given in Table 6-5.

❖ *Note:* Like the display switches described in Chapter 2, these soft switches share their locations with the keyboard data and strobe functions. The switches are activated only by writing, and the states can be determined only by reading, as indicated in Table 6-5.

Table 6-5
I/O memory switches

Name	Function	Location		Notes
		Hex	Decimal	
SLOTC3ROM	Slot ROM at $C300	$C00B	49163 –16373	Write
	Internal ROM at $C300	$C00A	49162 –16374	Write
	Read SLOTC3ROM switch	$C017	49175 –16361	Read
SLOTCXROM	Slot ROM at $Cx00	$C006	49159 –16377	Write
	Internal ROM at $Cx00	$C007	49158 –16378	Write
	Read SLOTCXROM switch	$C015	49173 –16363	Read

When SLOTC3ROM is on, the 256-byte ROM area at $C300 is available to a peripheral card in slot 3, which is the slot normally used for a terminal interface. If a card is installed in the auxiliary slot when you turn on the power or reset the Apple IIe, the SLOT3ROM switch is turned off. Turning SLOTC3ROM off disables peripheral-card ROM in slot 3 and enables the built-in 80-column firmware, as shown in Figure 6-3. The 80-column firmware is assigned to slot-3 address space because slot 3 is normally used with a terminal interface, so the built-in firmware will work with programs that use slot 3 this way.

The bus and I/O signals are always available to a peripheral card in slot 3, even when the 80-column hardware and firmware are operating. Thus it is always possible to use this slot for any I/O peripheral that does *not* have built-in firmware.

When SLOTCXROM is active (high), the I/O memory space from $C100 to $C7FF is allocated to the expansion slots, as described previously. Setting SLOTCXROM inactive (low) disables the peripheral-card ROM and selects built-in ROM in all of the I/O memory space except the part from $C000 to $C0FF (used for soft switches and data I/O), as shown in Figure 6-3. In addition to the 80-column firmware at $C300 and $C800, the built-in ROM includes firmware that performs the self-test of the Apple IIe's hardware.

❖ *Note:* Setting SLOTCXROM low enables built-in ROM in all of the I/O memory space (except the soft-switch area), including the $C300 space, which contains the 80-column firmware.

Developing cards for slot 3

Original IIe

In the original Apple IIe firmware, the internal slot 3 firmware was always switched in if there was an 80-column card (either 1K or 64K) in the auxiliary slot. This means that peripheral cards with their own ROM were effectively switched out of slot 3 when the system was turned on.

With the enhanced Apple IIe Monitor ROM, the rules are different. A peripheral card in slot 3 is now switched in when the system is started up or when Reset is pressed *if* the card's ROM has the following ID bytes:

$C305 = $38
$C307 = $18

The enhanced Apple IIe firmware requires that interrupt code be present in the $C3 page (either external or internal). A peripheral card in slot 3 must have the following code to support interrupts. After this segment, the code continues execution in the internal ROM at $C400.

```
$C3F4:IRQDONE     STA   $C081    ;Read ROM, write RAM
                  JMP   $FC7A    ;Jump to $F8 ROM
                  IRQ
                  BIT   $C015    ;slot or internal ROM
                  STA   $C007    ;force in internal ROM
```

When programming for cards in slot 3:

For more information about the $C300 firmware, see the Monitor ROM listing in Appendix J of this manual. Especially note the portion from $C300 through $C420.

- You must support the AUXMOVE and XFER routines at $C311 and $C314.
- Don't use unpublished entry points into the internal $Cn00 firmware, because there is no guarantee that they will stay the same.
- If your peripheral card is a character I/O device, you must follow the Pascal 1.1 firmware protocol, described in the next section.

Pascal 1.1 firmware protocol

The Pascal 1.1 firmware protocol was originally developed to be used with Apple Pascal 1.1 programs. The protocol is followed by all succeeding versions of Apple II Pascal, and can be used by programmers using other languages as well.

The Pascal 1.1 firmware protocol provides Apple IIe programmers with

- a standard way to uniquely identify new peripheral cards
- a standard way to address the firmware routines in peripheral cards

Device identification

The Pascal 1.1 firmware protocol uses four bytes near the beginning of the peripheral card's firmware to identify the peripheral card.

Address	Value
$Cs05	$38 (like the old Apple II Serial Interface Card)
$Cs07	$18 (like the old Apple II Serial Interface Card)
$Cs0B	$01 (the generic signature of new cards)
$Cs0C	$ci (the device signature)

The first hexadecimal digit, c, of the device signature byte identifies the device class; and the second hexadecimal digit, i, of the device signature byte is a unique identifier for the card, used by some manufacturers for their cards. Table 6-6 shows the device-class assignments.

For example, the Apple II Super Serial Card has a device signature of $31: the 3 signifies that it is a serial or parallel I/O card, and the 1 is the low-order digit supplied by Apple Technical Support.

Although version 1.1 of Pascal ignores the device signature, applications programs can use them to identify specific devices.

Table 6-6
Peripheral-card device-class assignments

Digit	Device class
$0	Reserved
$1	Printer
$2	Joystick or other X-Y input device
$3	Serial or parallel I/O card
$4	Modem
$5	Sound or speech device
$6	Clock
$7	Mass storage device
$8	80-column card
$9	Network or bus interface
$A	Special purpose (none of the above)
$B–F	Reserved for future expansion

I/O routine entry points

Indirect calls to the firmware in a peripheral card are done through a branch table in the card's firmware. The branch table of I/O routine entry points is located near the beginning of the Cs00 address space (s being the slot number where the peripheral card is installed).

The branch table locations that Pascal 1.1 firmware protocol uses are as follows:

Address	Contains
$Cs0D	Initialization routine offset (required)
$Cs0E	Read routine offset (required)
$Cs0F	Write routine offset (required)
$Cs10	Status routine offset (required)
$Cs11	$00 if optional offsets follow; nonzero if not
$Cs12	Control routine offset (optional)
$Cs13	Interrupt handling routine offset (optional)

Notice that $Cs11 contains $00 only if the control and interrupt handling routines are supported by the firmware. (For example, the SSC does not support these two routines, and so location $Cs11 contains a nonzero firmware instruction.) Apple II Pascal 1.0 and 1.1 do not support control and interrupt requests, but such requests are implemented in Pascal 1.2 and later versions and in ProDOS.

Table 6-7 gives the entry point addresses and the contents of the 65C02 registers on entry to and on exit from Pascal 1.1 I/O routines.

Table 6-7
I/O routine offsets and registers under Pascal 1.1 protocol

Address	Offset for	X register	Y register	A register
$Cs0D	Initialization			
	On entry	$Cs	$s0	
	On exit	Error code	(unchanged)	(unchanged)
$Cs0E	Read			
	On entry	$Cs	$s0	
	On exit	Error code	(unchanged)	Character read
$Cs0F	Write			
	On entry	$Cs	$s0	Char. to write
	On exit	Error code	(unchanged)	(unchanged)
$Cs10	Status			
	On entry	$Cs	$s0	Request (0 or 1)
	On exit	Error code	(changed)	(unchanged)

Interrupts on the enhanced Apple IIe

The original Apple IIe offered little firmware support for interrupts. The enhanced Apple IIe's firmware provides improved interrupt support, very much like the Apple IIc's interrupt support. Neither machine disables interrupts for extended periods.

Interrupts work on enhanced Apple IIe systems with an installed 80-column text card (either 1K or 64K) or a peripheral card with interrupt-handling ROM in slot 3. Interrupts are easiest to use with ProDOS and Pascal 1.2 because they have interrupt support built in. DOS 3.3 has no built-in interrupt support.

For more about interrupt support in ProDOS, see the *ProDOS Technical Reference Manual.*

The new interrupt handler operates like the Apple IIc interrupt handler, using the same memory locations and operating protocols. The main purpose of the interrupt handler is to support interrupts in *any* memory configuration. This is done by saving the machine's state at the time of the interrupt, placing the Apple in a standard memory configuration before calling your program's interrupt handler, then restoring the original state when your program's interrupt handler is finished.

For information about interrupt handling with Apple Pascal 1.2, see the *Device and Interrupt Support Tools Manual,* which is part of the Apple II Device Support Tools package (A2W0014).

What is an interrupt?

An **interrupt** is a hardware signal that tells the computer to stop what it is currently doing and devote its attention to a more important task. Print spooling and mouse handling are examples of interrupt use, things that don't take up all the time available to the system, but that should be taken care of promptly to be most useful.

For example, the Apple IIe mouse can send an interrupt to the computer every time it moves. If you handle that interrupt promptly, the mouse pointer's movement on the screen will be smooth instead of jerky and uneven.

Interrupt priority is handled by a daisy-chain arrangement using two pins, INT IN and INT OUT, on each peripheral-card slot. As described in Chapter 7, each peripheral card breaks the chain when it makes an interrupt request. On peripheral cards that don't use interrupts, these pins should be connected together.

The daisy chain gives priority to the peripheral card in slot 7: if this card opens the connection between INT IN and INT OUT, or if there is no card in this slot, interrupt requests from cards in slots 1 through 6 can't get through. Similarly, slot 6 controls interrupt requests (IRQ) from slots 1 through 5, and so on down the line.

When the IRQ' line on the Apple IIe's microprocessor is activated (pulled low), the microprocessor transfers control through the vector in locations $FFFE–$FFFF. This vector is the address of the Monitor's interrupt handler, which determines whether the request is due to an external IRQ or a BRK instruction and transfers control to the appropriate routine via the vectors stored in memory page 3. The BRK vector is in locations $03F0–$03F1 and ProDOS uses the IRQ vector in locations $03FE–$03FF. (See Table 4-11.) The Monitor normally stores the address of its reset routine in the IRQ vector; you should substitute the address of your program's interrupt-handling routine.

Apple Pascal doesn't use the BRK vector at $03F0–$03F1, but it does use the IRQ vector at $03FE–$03FF.

Interrupts on Apple IIe series computers

The interrupt handler built into the enhanced Apple IIe's firmware saves the contents of the accumulator on the stack. (The original Apple IIe saves the contents of the accumulator at location $45.) DOS 3.3, as well as the Monitor, rely on the integrity of location $45, so this change lets both DOS 3.3 and the Monitor continue to work with active interrupts on the enhanced Apple IIe.

Original IIe Since the built-in interrupt handler on the original Apple IIe uses location $45 to save the contents of the accumulator, the operating system fails when an interrupt occurs under DOS 3.3 on the original Apple IIe.

If you want to write programs that use interrupts while running on the original Apple IIe, Apple II Plus, or Apple II, you must use either ProDOS or Apple II Pascal 1.2 (or later versions). Both these operating systems give you full interrupt support, even though these versions of the Apple II don't include interrupt support in their firmware. (Versions of Pascal before 1.2 do not work with interrupts enabled on an original Apple IIe.)

Some other manufacturer's hardware, such as coprocessor cards, don't work properly in an interrupting environment. If you are trying to develop an application and encounter this problem, check with the manufacturer of the card to see if a later version of the hardware or its software will operate properly with interrupts active. You may not be able to use interrupts if an interrupt-tolerant version isn't available.

Interrupts are effective only if they are enabled most of the time. Interrupts that occur while interrupts are disabled will not be serviced.

Pascal, DOS 3.3, and ProDOS turn off interrupts while performing disk operations because of the critical timing of disk read and write operations. Some peripheral cards used in the Apple IIe disable interrupts while reading and writing.

Original IIe

Although the enhanced Apple IIe firmware never disables interrupts during screen handling, the original Apple IIe periodically turns interrupts off while doing 80-column screen operations. The effect is most noticeable while the screen is scrolling.

Important

Don't use PR#6 to restart your Apple IIe while running ProDOS with interrupts enabled since PR#6 doesn't disable interrupts. If you try it, ProDOS will fail as it starts up since its interrupt handlers aren't yet set up. If you have to restart, use Control-Reset or make sure that your program disables interrupts before it ends.

Rules of the interrupt handler

Unlike the Apple IIc, the enhanced Apple IIe's interrupt-handling firmware is not always switched in. Here are the reasons why this is so and the implications that necessarily follow.

There is *no* part of memory in the Apple IIe that is always switched in. Thus, there is no location for an interrupt handler that works for all memory configurations. However, the $C3 page of firmware is present on all systems that have 80-column text cards in their auxiliary slots, so it was selected as the starting location of the built-in interrupt-handling routine.

There are two factors that determine if the $C3 firmware is switched in and therefore whether or not interrupts will be usable:

- Is there an 80-column text card in the auxiliary slot?
- If not, is there a peripheral card in slot 3 with built-in ROM with bytes $C305 = $38 and $C307 = $18?

The Apple IIe's memory is switched according to the following rules at both powerup and reset:

- If there is a ROM card in slot 3, but no text card in the auxiliary slot, the firmware on the ROM card is switched in. This is necessary for Pascal to work.
- If there is a text card in the auxiliary slot, but no ROM card in slot 3, the internal $C3 firmware is switched in.
- If there is both a text card in the auxiliary slot and a ROM card in slot 3, the firmware on the ROM card is switched in.

Important

These rules mean that systems without 80-column text cards in the auxiliary slot do not have their internal $C3 firmware switched in. Such systems cannot handle interrupts or breaks (the software equivalent of interrupts). An application program must swap in the $C3 firmware both on initialization and after reset to make interrupts function properly on such a machine configuration. (ProDOS versions 1.1 and later do this for you during startup.)

See the section "Developing Cards for Slot 3" earlier in this chapter.

Another implication of the decision to have interrupt code in the $C3 page affects the shared $C800 space in the Apple IIe. When the $C3 page is referenced, the IIe hardware automatically switches in its own $C800 space. When the interrupt handler finishes, it restores the $C800 space to the original owner using MSLOT ($07F8). This means that it is very important for a peripheral card to place its slot address in MSLOT to support interrupts while code is being executed in its $C800 space.

Interrupt handling on the 65C02 and 6502

There are three possible conditions that will allow interrupts on the 65C02 and 6502:

- The IRQ line on the microprocessor is pulled low after a CLI instruction has been used (interrupts are not masked). This is the standard technique that devices use when they need immediate attention.
- The microprocessor executes a break instruction (BRK = opcode $00).
- A nonmaskable interrupt (NMI) occurs. The microprocessor services this interrupt whether or not the CLI instruction has been used. An NMI is completely independent of the interrupts discussed in this manual.

The microprocessor saves the current program counter and status byte on the stack when an interrupt occurs and then jumps to the routine whose address is stored in $FFFE and $FFFF. The sequence of operations performed by the microprocessor is as follows:

1. It finishes executing the current instruction if an IRQ is encountered. (If a BRK instruction is encountered, the current instruction is already finished.)
2. It pushes the high byte of the program counter onto the stack.
3. It pushes the low byte of the program counter onto the stack.
4. It pushes the processor status byte onto the stack.
5. It executes a JMP ($FFFE) instruction.

The interrupt vector at $FFFE

Three separate regions of memory contain address $FFFE in an Apple IIe with an Extended 80-Column Text Card: the built-in ROM, the bank-switched memory in main RAM, and the bank-switched memory in auxiliary RAM. The vector at $FFFE in the ROM points to the built-in interrupt handling routine. You must copy the ROM's interrupt vector to the other banks yourself if you plan to use interrupts with the bank-switched memory switched in.

The built-in interrupt handler

The enhanced Apple IIe's built-in interrupt handler records the computer's current memory configuration, then sets the computer's memory configuration to a standard state so that your program's interrupt handler always begins running in the same memory configuration.

Interrupt-handler installation is described in the *ProDOS Technical Reference Manual* and the *Device and Interrupt Support Tools Manual*, which is part of the Apple II Device Support Tools package (A2W0014).

Next the built-in interrupt handler checks to see if the interrupt was caused by a break instruction, and handles it as just described under "Interrupt Handling on the 65C02 and 6502." If it was not a break, it passes control to the interrupt-handling routine whose address is stored at $3FE and $3FF of main memory. Normally, that would be the operating system's interrupt handler, unless you have installed one of your own.

After your program's interrupt handler returns (with an RTI), the built-in interrupt handler restores the memory configuration, and then does another RTI to return to where it was when the interrupt occurred. Table 6-8 illustrates this entire process. Each of these steps is explained later in this chapter.

Table 6-8
Interrupt-handling sequence

Interrupted program	Processor	Built-in handler	User's handler
Program→	Push address Push status		
	JMP ($FFFE)→	Save old and set new memory configuration	
		If BRK, then go to break handler ($FA47)→	
		Our interrupt?	
		NO: Push address Push status JMP ($3FE)→	Handle interrupt
			...
		YES: Handle it	...
		Restore memory configuration ←RTI	
	←Pull status	RTI	
←Program	Pull address		

Saving the Apple IIe's memory configuration

The built-in interrupt handler saves the Apple IIe's memory configuration and then sets it to a known state according to these rules:

- Text Page 1 is switched in (PAGE2 off) so that main screen holes are accessible if 80STORE and PAGE2 are on.
- Main memory is switched in for reading (RAMRD off).
- Main memory is switched in for writing (RAMWRT off).
- $D000–$FFFF ROM is switched in for reading (RDLCRAM off).
- Main stack and zero page are switched in (ALTZP off).
- The auxiliary stack pointer is preserved, and the main stack pointer is restored. (See the next section, "Managing Main and Auxiliary Stacks.")

Important Because main memory is switched in, all memory addresses used later in this chapter are in main memory unless otherwise specified.

Managing main and auxiliary stacks

Apple has adopted a convention that allows the Apple IIe to be run with two separate stack pointers since the Apple IIe with an Extended 80-Column Text Card has two stack pages. Two bytes in the auxiliary stack page are used as storage for inactive stack pointers: $0100 for the main stack pointer when the auxiliary stack is active, and $0101 for the auxiliary stack pointer when the main stack is active.

When a program using interrupts switches in the auxiliary stack for the first time, it must place the value of the main stack pointer at $0100 (in the auxiliary stack) and initialize the auxiliary stack pointer to $FF (the top of the stack). When it subsequently switches from one stack to the other, it must save the current stack pointer before loading the pointer for the other stack.

The current stack pointer is stored at $0101, and the main stack pointer is retrieved from $0100 when an interrupt occurs while the auxiliary stack is switched in. *Then* the main stack is switched in. The stack pointer is restored to its original value after the interrupt has been handled.

Important The built-in XFER routine does not support this procedure. If you are using XFER to swap stacks, you must use code like the following to set up the stack pointers and stack.

```
* This example transfers control from a code segment running
* using the main stack to one running using the aux stack.
*
1  XFERALT   PHP                          ;preserve interrupt status in A
2            PLA
3            SEI                          ;disable interrupts
4            TSX                          ;save main stack pointer at $100
5            STA     SETALTZP             ;and swap zero pages
6            STX     $100
7            LDX     $101                 ;now restore aux stack pointer
8            TXS
9            PHA                          ;and interrupt status
10           PLP
11           LDA   #DESTL                 ;set destination address
12           STA    $3ED
13           LDA   #DESTH
14           STA   $3EE
15           SEC/CLC                      ;set direction of transfer
16           BIT     RTS                  ;V=1 for alt zero page(RTS=$60)
17           JMP   XFER                   ;do transfer
             To transfer control the other direction, change the following lines
5            STX $101
6            LDX $100
7            STA SETSTDZP
16           CLV                          ;V=0 for main zp
```

The user's interrupt handler at $3FE

If your program has an interrupt handler, it must place the entry address of that handler at $03FE. After it sets the machine to a standard state, the IIe's internal interrupt handler transfers control to the routine whose address is in the vector at $03FE.

It is very important for a peripheral card to place its slot address in MSLOT to support interrupts whenever it is executing code in its $C800 space. Whenever the $C3 page is referenced, the IIe automatically switches in its own $C800 ROM space. When the interrupt handler finishes, it restores the $C800 space to the original owner using MSLOT ($07F8).

Warning Be careful to install interrupt handlers according to the rules of the operating system that you are using. Placing the address of your program's interrupt handler at $03FE disconnects the operating system's interrupt handler.

The $03FE interrupt handler must do these things:

1. Verify that the interrupt came from the expected source.
2. Handle the interrupt as desired.
3. Clear the appropriate interrupt soft switch.
4. Return with an RTI.

Here are some things to remember if you are dealing with programs that must run in an interrupt enviroment:

- There is no guaranteed maximum response time for interrupts because the system may be doing a disk operation that lasts for several seconds.
- Once the built-in interrupt handler is called, it takes *at least* 150 to 200 microseconds for it to call your interrupt-handling routine. After your routine returns, it takes 40 to 140 microseconds to restore memory and return to the interrupted program.
- If memory is in the standard state when the interrupt occurs, the total overhead for interrupt processing is about 150 microseconds less than if memory is in the worst state. (The worst state is one that requires the most work to set up for: 80STORE and PAGE2 on; auxiliary memory switched in for reading and writing; bank-switched memory page 2 in the auxiliary bank switched in for reading and writing; and internal $Cn00 ROM switched in).
- Interrupt overhead will be greater if your interrupt handler is installed through an operating system's interrupt dispatcher. The length of delay depends on the operating system, and on whether the operating system dispatches the interrupt to other routines before calling yours.

Table 6-9
BRK handler information

Information	Location
Program counter (low byte)	$3A
Program counter (high byte)	$3B
Encoded memory state	$44
Accumulator	$45
X register	$46
Y register	$47
Status register	$48

Handling break instructions

The 65C02 treats a break instruction (BRK, opcode $00) just like a hardware interrupt. After the interrupt handler sets the memory configuration, it checks to see if the interrupt was caused by a break (bit 4 of the status byte is set) and, if it was, jumps to a break-handling routine. This routine saves the state of the computer at the time of the break as shown in Table 6-9.

Finally the break routine jumps to the routine whose address is stored at $3F0 and $3F1.

The encoded memory state in location $44 is interpreted as shown in Table 6-10.

Table 6-10
Memory configuration information

Bit 7 = 1	if auxiliary zero page and auxiliary stack are switched in
Bit 6 = 1	if 80STORE and PAGE2 both on
Bit 5 = 1	if auxiliary RAM switched in for reading
Bit 4 = 1	if auxiliary RAM switched in for writing
Bit 3 = 1	if bank-switched RAM being read
Bit 2 = 1	if bank-switched $D000 Page 1 switched in and RAMREAD set
Bit 1 = 1	if bank-switched $D000 Page 2 switched in and RAMREAD set
Bit 0 = 1	if internal Cs ROM was switched in (IIe only)

Interrupt differences: Apple IIe versus Apple IIc

If you are writing software for both the Apple IIe and the Apple IIc, you should know that there are several important differences between the interrupts on the enhanced Apple IIe and those on the Apple IIc. They are the following:

- In the Apple IIc ROM, $FFFE points to $C803; in the Apple IIe ROM, to $C3FA. To ensure that the proper interrupt vectors are placed into the Language Card RAM space, always copy them to the RAM from the ROM. (When you initialize built-in devices on the IIc, these vectors are automatically updated).
- There is no shared $C800 ROM in the Apple IIc. Peripheral cards share this space in the Apple IIe. Thus it is crucial that the slot address of the peripheral card using the $C800 space is stored in MSLOT ($07F8). When the interrupt handler goes to the internal $C3 space, the IIe hardware switches in its own $C800 space. When the interrupt handler finishes, it restores the $C800 space to the slot whose address is in MSLOT.
- The Apple IIc $C800 space is always switched in. The enhanced Apple IIe's interrupt handler preserves the state of the $C800-space switch and then switches in the slot I/O space. This means that when restoring the state of the system using the value placed in location $44, break-handling routines must restore one more value on the Apple IIe than on the Apple IIc.

Chapter 7

Hardware Implementation

Most of this manual describes functions—what the Apple IIe does. This chapter, on the other hand, describes objects—the pieces of hardware the Apple IIe uses to carry out its functions. If you are designing a piece of peripheral hardware to attach to the Apple IIe, or if you just want to know more about how the Apple IIe is built, you should study this chapter.

Extended keyboard IIe

Because the extended keyboard IIe uses several new components and includes the Extended 80-Column Text Card as a standard feature, its schematic diagram is slightly different from that of the original and enhanced IIe's. The schematic for the extended keyboard IIe is provided in Figure 7-16a–d at the end of this chapter. If you have an extended keyboard IIe you should refer to this schematic whenever the text refers to the schematic for the original and the enhanced IIe's (Figure 7-15a–d).

Environmental specifications

Table 7-1
Summary of environmental specifications

Operating temperature	10° to 40° C (50° to 104° F)
Relative humidity	10% to 90%
Line voltage	95 to 127 VAC

The Apple IIe is quite sturdy when used in the way it was intended. Table 7-1 defines the conditions under which the Apple IIe is designed to function properly.

You should treat the Apple IIe with the same kind of care as any other electrical appliance. You should protect it from physical violence, such as hammer blows or defenestration. You should protect the mechanical keyboard and the electrical connectors inside the case from spilled liquids, especially those with dissolved contaminants, such as coffee and cola drinks.

In normal operation, enough air flows through the slots in the case to keep the insides from getting too hot, although some of the parts inside the Apple IIe normally get rather warm to the touch. If you manage to overheat your Apple IIe, by blocking the ventilation slots in the top and bottom for example, the first symptom will be erratic operation. The memory devices in the Apple IIe are sensitive to heat: when they get too hot, they occasionally change a bit of data. The exact result depends on what kind of program you are running and on just which bit of memory is affected.

The power supply

The power supply in the Apple IIe operates on normal household AC power and provides enough low-voltage electrical power for the built-in electronics plus a full complement of peripheral cards, including disk controller cards and communications interfaces. The basic specifications of the power supply are listed in Table 7-2.

The Apple IIe's power cord should be plugged into a three-wire 110- to 120-volt outlet. You must connect the Apple IIe to a grounded outlet or to a good earth ground. In addition, the line voltage must be in the range given in Table 7-2. If you try to operate the Apple IIe from a power source with more than 127 volts AC, you will damage the power supply.

Table 7-2
Power supply specifications

Line voltage	97 to 127VAC
Maximum power consumption	60W continuous 80W intermittent*
Supply voltages	+5V ±3% +11.8V ±6% –5.2V ±10% –12V ±10%
Maximum supply currents	+5V: 2.5A +12V: 1.5A continuous, 2.5A intermittent* –5V: 250mA –12V: 250mA
Maximum case temperature	40° C (104° F)

* *Intermittent operation:* The Apple IIe can safely operate for up to 20 minutes at the higher load if followed by at least 10 minutes at normal load.

The Apple IIe uses a custom-designed switching-type power supply. It is small and lightweight, and it generates less heat than other types of power supplies do.

The Apple IIe's power supply works by converting the AC line voltage to DC and using this DC voltage to power a variable-frequency oscillator. The oscillator drives a small transformer with many separate windings to produce the different voltages required. A circuit compares the voltage of the +5-volt supply with a reference voltage and feeds an error signal back to the oscillator circuit. The oscillator circuit uses the error signal to control the frequency of its oscillation and keep the output voltages in their normal ranges.

The power supply includes circuitry to protect itself and the other electronic parts of the Apple IIe by turning off all four supply voltages whenever it detects one of the following malfunctions:

- any supply voltage short-circuited to ground
- the power-supply cable disconnected
- any supply voltage outside the normal range

Any time one of these malfunctions occurs, the protection circuit stops the oscillator, and all the output voltages drop to zero. After about half a second, the oscillator starts up again. If the malfunction is still occurring, the protection circuit stops the oscillator again. The power supply will continue to start and stop this way until the malfunction is corrected or the power is turned off.

Warning If you think the power supply is broken, do not attempt to repair it yourself. The power supply is in a sealed enclosure because some of its circuits are connected directly to the power line. Special equipment is needed to repair the power supply safely, so see your authorized Apple dealer for service.

The power connector

The cable from the power supply is connected to the main circuit board by a six-pin connector with a strain-relief catch. The connector pins are identified in Table 7-3 and Figure 7-15d (or Figure 7-16d for the extended keyboard IIe).

Table 7-3
Power connector signal specifications

Pin	Signal	Description
1,2	Ground	Common electrical ground
3	+5V	+5V from power supply
4	+12V	+12V from power supply
5	–12V	–12V from power supply
6	–5V	–5V from power supply

The 65C02 microprocessor

The enhanced Apple IIe uses a 65C02 microprocessor as its central processing unit (CPU). The 65C02 in the Apple IIe runs at a clock rate of 1.023 MHz and performs up to 500,000 eight-bit operations per second. You should not use the clock rate as a criterion for comparing different types of microprocessors. The 65C02 has a simpler instruction cycle than most other microprocessors and it uses instruction pipelining for faster processing. The speed of the 65C02 with a 1MHz clock is equivalent to other types of microprocessors with clock rates up to 2.5MHz.

See Appendix A for a description of the 65C02's instruction set and electrical characteristics.

The 65C02 has a 16-bit address bus, giving it an address space of 64K (2 to the 16th power, or 65,536) bytes. The Apple IIe uses special techniques to address outside of this range: see the sections "Bank-Switched Memory" and "Auxiliary Memory and Firmware" in Chapter 4 and the section "Switching I/O Memory" in Chapter 6.

Table 7-4
65C02 microprocessor specifications

Type	65C02
Register complement	8-bit accumulator (A) 8-bit index registers (X,Y) 8-bit stack pointer (S) 8-bit processor status (P) 16-bit program counter (PC)
Data bus	8 bits wide
Address bus	16 bits wide
Address range	65,536 (64K)
Interrupts	IRQ (maskable) NMI (nonmaskable) BRK (programmed)
Operating voltage	+5V (± 5%)
Power dissipation	5 mW (at 1 MHz)

65C02 timing

The operation of the Apple IIe is controlled by a set of synchronous timing signals, sometimes called *clock signals*. In electronics, the word *clock* is used to identify signals that control the timing of circuit operations. The Apple IIe doesn't contain the kind of clock you tell time by, although its internal timing is accurate enough that a program running on the Apple IIe can simulate such a clock.

The frequency of the oscillator that generates the master timing signal is 14.31818 MHz. Circuitry in the Apple IIe uses this clock signal, named 14M, to produce all the other timing signals. These timing signals perform two major tasks: controlling the computing functions, and generating the video display. The timing signals directly involved with the operation of the 65C02 (and 6502 on the original version of the Apple IIe) are described in this section. Other timing signals are described in this chapter in the sections "RAM Addressing," "Video Display Modes," and "The Expansion Slots."

The main 65C02 timing signals are listed in Table 7-5, and their relationships are diagrammed in Figure 7-1. The 65C02 clock signals are ø1 and ø0, complementary signals at a frequency of 1.02273 MHz. The Apple IIe signal named ø0 is equivalent to the signal called ø2 in the hardware manual. (It isn't identical: it's a few nanoseconds early.)

The operations of the 65C02 are related to the clock signals in a simple way: address during ø1, data during ø0. The 65C02 puts an address on the address bus during ø1. This address is valid not later than 140 nanoseconds after ø1 goes high and remains valid through all of ø0. The 65C02 reads or writes data during ø0. If the 65C02 is writing, the read/write signal is low during ø0 and the 65C02 puts data on the data bus. The data is valid not later than 75 nanoseconds after ø0 goes high. If the 65C02 is reading, the read/write signal remains high. Data on the data bus must be valid no later than 50 nanoseconds before the end of ø0.

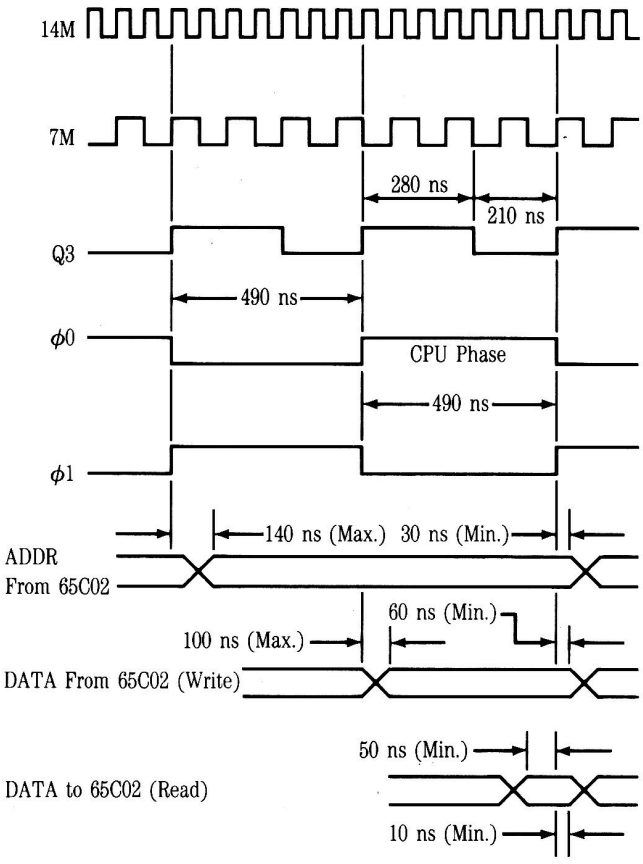

Figure 7-1
65C02 timing signals

Table 7-5
65C02 timing signal descriptions

Signal	Description
14M	Master oscillator, 14.318 MHz; also 80-column dot clock
VID7M	Intermediate timing signal and 40-column dot clock
Q3	Intermediate timing signal, 2.045 MHz with asymmetrical duty cycle
ø0	Phase 0 of 65C02 clock, 1.0227 MHz; complement of ø1

The custom integrated circuits

Most of the circuitry that controls memory and I/O addressing in the Apple IIe is in three custom integrated circuits called the Management Unit (MMU), the Input/Output Unit (IOU), and the Programmed Array Logic device (PAL). The soft switches used for controlling the various I/O and addressing modes of the Apple IIe are addressable flags inside the MMU and the IOU. The functions of these two devices are not as independent as their names suggest; working together, they generate all of the addressing signals. For example, the MMU generates the address signals for the CPU, while the IOU generates similar address signals for the video display.

The Memory Management Unit

The circuitry inside the Memory Management Unit (MMU) implements these soft switches, which are described in the indicated chapters in this manual:

- Page 2 display (PAGE2): Chapter 2
- high-resolution mode (HIRES): Chapter 2
- store to 80-column card (80STORE): Chapter 2
- select bank 2: Chapter 4
- enable bank-switched RAM: Chapter 4
- read auxiliary memory (RAMRD): Chapter 4
- write auxiliary memory (RAMWRT): Chapter 4
- auxiliary stack and zero page (ALTZP): Chapter 4
- slot ROM for connector #3 (SLOTC3ROM): Chapter 6
- slot ROM in I/O space (SLOTCXROM): Chapter 6

The 64K dynamic RAMs used in the Apple IIe use a multiplexed address, as described later in this chapter in the section "Dynamic-RAM Timing." The MMU generates this multiplexed address for memory reading and writing by the 65C02 CPU. The pinouts and signal descriptions of the MMU are shown in Figure 7-2 and Table 7-6.

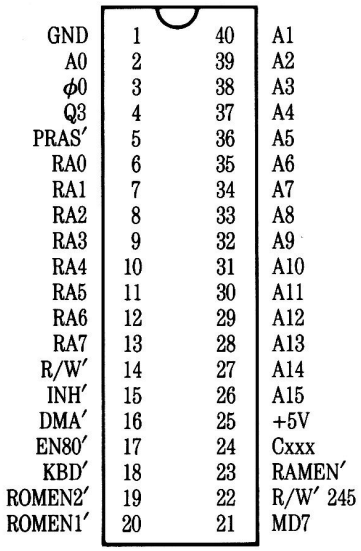

Figure 7-2
MMU pinouts

Table 7-6
MMU signal descriptions

Pin	Signal	Description
1	GND	Power and signal common
2	A0	65C02 address input
3	ø0	Clock phase 0 input
4	Q3	Timing signal input
5	PRAS'	Memory row-address strobe
6–13	RA0–RA7	Multiplexed address output
14	R/W'	65C02 read-write control signal
15	INH'	Inhibits main memory (tied to +5V)
16	DMA'	Controls data bus for DMA transfers
17	EN80'	Enables auxiliary RAM
18	KBD'	Enables keyboard data bits 0–6
19	ROMEN2'	Enables ROM (tied to ROMEN1')
20	ROMEN1'	Enables ROM (tied to ROMEN2')
21	MD7	State of MMU flags on data bus bit 7
22	RW' 245	Controls 74LS245 data-bus buffer
23	RAMEN'	Enables main RAM
24	Cxxx	Enables peripheral-card memory
25	+5V	Power
26–40	A15–A1	65C02 address input

The Input/Output Unit

The circuitry inside the Input/Output Unit (IOU) implements the following soft switches, all described in Chapter 2 in this manual:

- Page 2 display (PAGE2)
- high-resolution mode (HIRES)
- text mode (TEXT)
- mixed mode (MIXED)
- 80-column display (80COL)
- text display mode select (ALTCHAR)
- any-key-down
- annunciators
- vertical blanking (VBL)

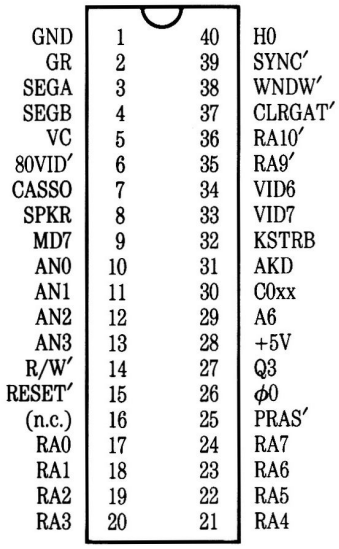

Figure 7-3
IOU pinouts

The 64K dynamic RAMs used in the Apple IIe require a multiplexed address, as described later in this chapter in the section "Dynamic-RAM Timing." The IOU generates this multiplexed address for the data transfers required for display and memory refresh during clock phase 1. The way this address is generated is described later in this chapter in the section "Display Address Mapping." The pinouts and signal descriptions for the IOU are shown in Figure 7-3 and Table 7-7.

Table 7-7
IOU signal descriptions

Pin	Signal	Description
1	GND	Power and signal common
2	GR	Graphics mode enable
3	SEGA	In text mode, works with VC (see pin 5) and SEGB to determine character row address
4	SEGB	In text mode, works with VC (see pin 5) and SEGA; in graphics mode, selects high resolution when low, low resolution when high
5	VC	Display vertical counter bit: in text mode, SEGA, SEGB, and VC determine which of the eight rows of a character's dot pattern to display; in low resolution, selects upper or lower block defined by a byte
6	80VID'	80-column video enable
7	CASSO	Cassette output signal
8	SPKR	Speaker output signal
9	MD7	Internal IOU flags for data bus (bit 7)3
10–13	AN0–AN3	Annunciator outputs
14	R/W'	65C02 read-write control signal
15	RESET'	Power on and reset output
16		(Nothing is connected to this pin.)
17–24	RA0–RA7	Video refresh multiplexed RAM address (phase 1)

Table 7-7 (continued)
IOU signal descriptions

Pin	Signal	Description
25	PRAS′	Row-address strobe (phase 0)
26	ø0	Master clock phase 0
27	Q3	Intermediate timing signal
28	+5V	Power
29	A6	Address bit 6 from 65C02
30	C0xx	I/O address enable
31	AKD	Any-key-down signal
32	KSTRB	Keyboard strobe signal
33,34	VIDD7,VIDD6	Video display data bits
35,36	RA9′,RA10′	Video display control bits
37	CLRGAT′	Color-burst gate (enable)
38	WNDW′	Display blanking signal
39	SYNC′	Display synchronization signal
40	H0	Display horizontal timing signal (low bit of character counter)

The PAL device

A Programmed Array Logic device, type PAL 16R8, generates several timing and control signals in the Apple IIe. These signals are listed in Table 7-8. The PAL pinouts are given in Figure 7-4.

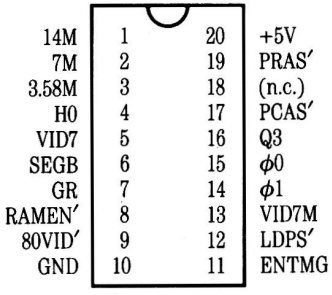

Figure 7-4
PAL pinouts

Table 7-8
PAL signal descriptions

Pin	Signal	Description
1	14M	14.31818 MHz master timing signal
2	7M	7.15909 MHz timing signal
3	3.58M	3.579545 MHz timing signal
4	H0	Horizontal video timing signal
5	VID7	Video data bit 7
6	SEGB	Video timing signal
7	GR	Video display graphics-mode enable
8	RAMEN′	RAM enable (CAS enable)
9	80VID′	Enable 80-column display mode

Table 7-8 (continued)
PAL signal descriptions

Pin	Signal	Description
10	GND	Power and signal common
11	ENTMG	Enable master timing
12	LDPS′	Video shift-register load enable
13	VID7M	Video dot clock, 7 or 14 MHz
14	==1	Phase 1 system clock
15	øo	Phase 0 system clock
16	Q3	Intermediate timing and strobe signal
17	PCAS′	RAM column-address strobe
18	N.C.	(This pin is not used.)
19	PRAS′	RAM row-address strobe
20	+5V	Power

Memory addressing

The Apple IIe's microprocessor can address 65,536 locations. Apple IIe uses this entire address space, and then some: some areas in memory are used for more than one function. The following sections describe the memory devices used in the Apple IIe and the way they are addressed. Input and output also use portions of the memory address space; refer to the section "Peripheral-Card Memory Spaces" in Chapter 6 for information.

ROM addressing

In the original and the enhanced Apple IIe's, the following programs are permanently stored in two type 2364 8K by seven-bit ROMs (read-only memory):

- Applesoft editor and interpreter
- System Monitor
- 80-column display firmware
- self-test routines

These two ROMs are enabled by two signals named ROMEN1 and ROMEN2. The ROM enabled by ROMEN1, sometimes called the *Diagnostics ROM,* occupies the memory address space from $C100 to $DFFF. The address space from $C300 to $C3FF and from $C800 to $CFFF contains the 80-column display firmware. Those address spaces are normally assigned to ROM on a peripheral card in slot 3.

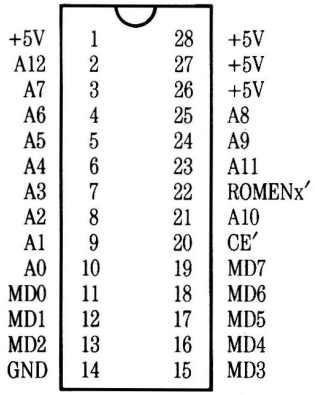

Figure 7-5
2364 ROM pinouts

For a discussion of the way the 80-column firmware overrides the peripheral card, see the section "Other Uses of I/O Memory Space" in Chapter 6. The pinouts of the 2364 ROMs are given in Figure 7-5.

Extended keyboard IIe

The extended keyboard IIe has the same programs stored in ROM as the original and enhanced IIe's do. However, the extended keyboard IIe uses a single 23128 IC (128K ROM) instead of the two 2364 ICs used in the original and the enhanced IIe. This new ROM IC is enabled by the ROMEN signal, which is a logical AND of the ROMEN1 and ROMEN2 signals. The pinout diagram for the 23128 ROM is given in Figure 7-6.

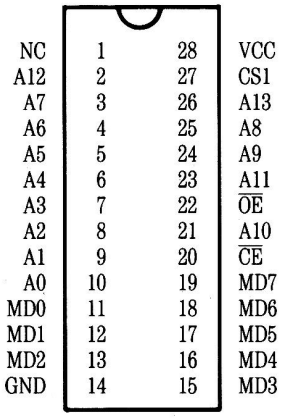

Figure 7-6
23128 ROM pinouts

Two other portions of the Diagnostics ROM, addressed from $C100 to $C2FF and from $C400 to $C7FF, contain the built-in self-test routines. These address spaces are normally assigned to the peripheral cards; when the self-test programs are running, the peripheral cards are disabled.

The remainder of the Diagnostics ROM, addressed from $D000 to $DFFF, contains part of the Applesoft BASIC interpreter.

The ROM enabled by ROMEN2, sometimes called the Monitor ROM, occupies the memory address space from $E000 to $FFFF. This ROM contains the rest of the Applesoft interpreter, in the address space from $E000 to $EFFF, and the Monitor subroutines, from $F000 to $FFFF.

The other ROMs in the Apple IIe are a type 2316 ROM used for the keyboard character decoder and a type 2333 ROM used for character sets for the video display. This 2333 ROM is rather large because it includes a section of straight-through bit-mapping for the graphics modes. This way, graphics display video can pass through the same circuits as text without additional switching circuitry. The 2316's pinout is given in Figure 7-7, and the 2333's pinout is given in Figure 7-8.

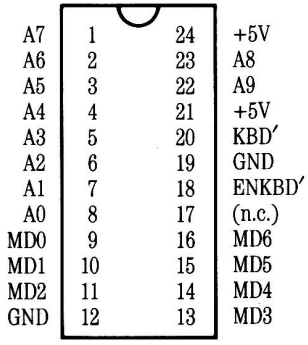

Figure 7-7
2316 ROM pinouts

RAM addressing

The RAM (programmable memory) in the Apple IIe is used to store both programs (along with their associated data) and the video display. The RAM in both the original and the enhanced IIe consists of eight 64Kx1 RAM ICs (Figure 7-9). The RAM in the extended keyboard IIe consists of two 64Kx4 RAM ICs (Figure 7-10).

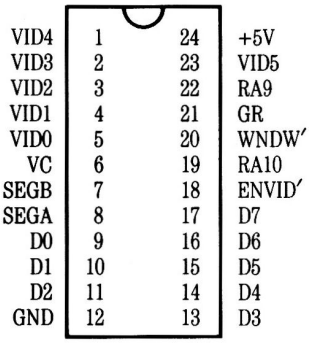

Figure 7-8
2333 ROM pinouts

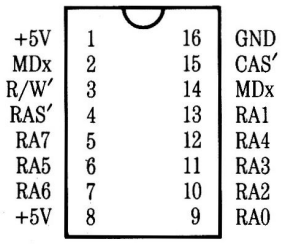

Figure 7-9
64Kx1 RAM pinouts

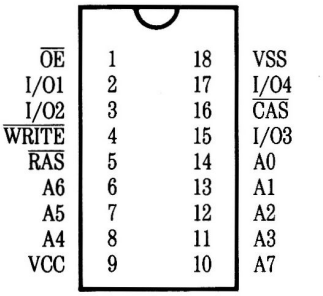

Figure 7-10
64Kx4 RAM pinouts

The areas in RAM that are used for the display are accessed both by the 65C02 microprocessor and by the video display circuits. In some computers, this dual access results in addressing conflicts (cycle stealing) that can cause temporary dropouts in the video display. This problem does not occur in the Apple IIe, thanks to the way the microprocessor and the video circuits share the memory.

The memory circuits in the Apple IIe take advantage of the two-phase system clock described earlier in this chapter in the section "65C02 Timing" to interleave the microprocessor memory accesses and the display memory accesses so that they never interfere with each other. The microprocessor reads or writes to RAM only during ø0, and the display circuits read data only during ø1.

Dynamic-RAM refreshment

The image on a video display is not permanent; it fades rapidly and must be refreshed periodically. To refresh the video display, the Apple IIe reads the data in the active display page and sends it to the display. To prevent visible flicker in the display, and to conform to standard practice for broadcast video, the Apple IIe refreshes the display 60 times per second.

The dynamic RAM devices used in the Apple IIe also need a kind of refresh, because the data is stored in the form of electric charges, which diminish with time and must be replenished every so often. The Apple IIe is designed so that refreshing the display also refreshes the dynamic RAMs. The next few paragraphs explain how this is done.

The job of refreshing the dynamic RAM devices is minimized by the structure of the devices themselves. The individual data cells in each RAM device are arranged in a rectangular array of rows and columns. When the device is addressed, the part of the address that specifies a row is presented first, followed by the address of the column. Splitting information into parts that follow each other in time is called *multiplexing*. Because only half of the address is needed at one time, multiplexing the address reduces the number of pins needed for connecting the RAMs.

Different manufacturers' 64K RAMs have cell arrays of either 128 rows by 512 columns or 256 rows by 256 columns. Only the row portion of the address is used in refreshing the RAMs.

Table 7-9
RAM address multiplexing

Mux'd address	Row address	Column address
RA0	A0	A9
RA1	A1	A6
RA2	A2	A10
RA3	A3	A11
RA4	A4	A12
RA5	A5	A13
RA6	A7	A14
RA7	A8	A15

Now consider how the display is refreshed. As described later in this chapter in the section "The Video Counters," the display circuitry generates a sequence of 8,192 memory addresses in high-resolution mode; in text and low-resolution modes, this sequence is the 1,024 display-page addresses repeated eight times. The display address cycles through this sequence 60 times a second, or once every 17 milliseconds. The way the low-order address lines are assigned to the RAMs, the row address cycles through all 256 possible values once every two milliseconds. (See Figure 7-11.) This more than satisfies the refresh requirements of the dynamic RAMs.

Dynamic-RAM timing

The Apple IIe's microprocessor clock runs at a moderate speed, about 1.023 MHz, but the interleaving of CPU and display cycles means that the RAM is being accessed at a 2 MHz rate, or a cycle time of just under 500 nanoseconds. Data for the CPU is strobed by the falling edge of ø0, and display data is strobed by the falling edge of ø1, as shown in Figure 7-11.

The RAM timing looks complicated because the RAM address is multiplexed, as described in the previous section. The MMU takes care of multiplexing the address for the CPU cycle, and the IOU performs the same function for the display cycle. The multiplexed address is sent to the RAM ICs over the lines labeled RA0–RA7. Along with the other timing signals, the PAL device generates two signals that control the RAM addressing: row-address strobe (RAS) and column-address strobe (CAS).

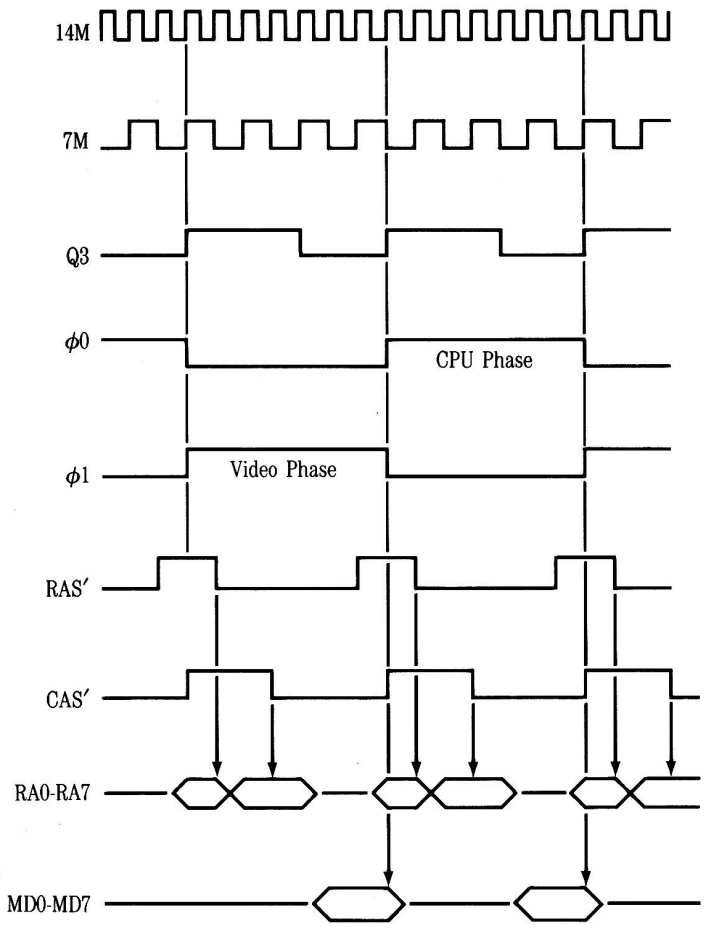

Figure 7-11
RAM timing signals

Table 7-10
RAM timing signal descriptions

Signal	Description
ø0	Clock phase 0 (CPU phase)
ø1	Clock phase 1 (display phase)
RAS	Row-address strobe
CAS	Column-address strobe
Q3	Alternate RAM/column-address strobe
RA0–RA7	Multiplexed address bus
MD0–MD7	Internal data bus

The video display

The Apple IIe produces a video signal that creates a display on a standard video monitor or, if you add an RF modulator, on a black-and-white or color television set. The video signal is a composite made up of the data that is being displayed plus the horizontal and vertical synchronization signals that the video monitor uses to arrange the lines of display data on the screen.

- *Video standards:* Apple IIe's manufactured for sale in the U.S. generate a video signal that is compatible with the standards set by the NTSC (National Television Standards Committee). Apple IIe's manufactured for sale in European countries generate video that is a modified NTSC signal.

The display portion of the video signal is a time-varying voltage generated from a stream of data bits, where a 1 corresponds to a voltage that generates a bright dot, and a 0 to a dark dot. The display bit stream is generated in bursts that correspond to the horizontal lines of dots on the video screen. The signal named WNDW' is low during these bursts.

During the time intervals between bursts of data, nothing is displayed on the screen. During these intervals, called the *blanking intervals,* the display is blank and the WNDW' signal is high. The synchronization signals, called *sync* for short, are produced by making the signal named SYNC' low during portions of the blanking intervals. The sync pulses are at a voltage equivalent to blacker-than-black video and don't show on the screen.

The video counters

The address and timing signals that control the generation of the video display are all derived from a chain of counters inside the IOU. Only a few of these counter signals are accessible from outside the IOU, but they are all important in understanding the operation of the display generation process, particularly the display-memory addressing described in the next section.

The horizontal counter is made up of seven stages: H0, H1, H2, H3, H4, H5, and HPE'. The input to the horizontal counter is the 1 MHz signal that controls the reading of data being displayed. The complete cycle of the horizontal counter consists of 65 states. The six bits H0 through H5 count normally from 0 to 63, then start over at 0. Whenever this happens, HPE' forces another count with H0 through H5 held at 0, thus extending the total count to 65.

The IOU uses the 40 horizontal count values from 25 through 64 in generating the low-order part of the display data address, as described later in this chapter in the section "Display Address Mapping." The IOU uses the count values from 0 to 24 to generate the horizontal blanking, the horizontal sync pulse, and the color-burst gate.

When the horizontal count gets to 65, it signals the end of a line by triggering the vertical counter. The vertical counter has nine stages: VA, VB, VC, V0, V1, V2, V3, V4, and V5. When the vertical count reaches 262, the IOU resets it and starts counting again from zero. Only the first 192 scanning lines are actually displayed; the IOU uses the vertical counts from 192 to 261 to generate the vertical blanking and sync pulse. Nothing is displayed during the vertical blanking interval. (The vertical line count is 262 rather than the standard 262.5 because, unlike normal television, the Apple IIe's video display is not interlaced.)

- *Smooth animation:* Animation displays sometimes have an erratic flicker caused by changing the display data at the same time it is being displayed. You can avoid this on the Apple IIe by reading the vertical-blanking signal (VBL) at location $C019 and changing display data while VBL is low only (data value less than 128).

Display memory addressing

As described in Chapter 2 in the section "Addressing Display Pages Directly," data bytes are not stored in memory in the same sequence in which they appear on the display. You can get an idea of the way the display data is stored by using the Monitor to set the display to graphics mode, then storing data starting at the beginning of the display page at hexadecimal $400 and watching the effect on the display. If you do this, you should use the graphics display instead of text to avoid confusion: the text display is also used for Monitor input and output.

If you want your program to display data by storing it directly into the display memory, you must first transform the display coordinates into the appropriate memory addresses, as shown in the section "Video Display Pages" in Chapter 2. The descriptions that follow will help you understand how this address transformation is done and why it is necessary. They will not (alas!) eliminate that necessity.

The address transformation that folds three rows of forty display bytes into 128 contiguous memory locations is the same for all display modes, so it is described first. The differences among the different display modes are then described in the section "Video Display Modes."

Display address mapping

Consider the simplest display on the Apple IIe, the 40-column text mode. To address 40 columns requires 6 bits, and to address 24 rows requires another 5 bits, for a total of 11 address bits. Addressing the display this way would involve 2048 (2 to the eleventh power) bytes of memory to display a mere 960 characters. The 80-column text mode would require 4096 bytes to display 1920 characters. The leftover chunks of memory that were not displayed could be used for storing other data, but not easily, because they would not be contiguous.

Instead of using the horizontal and vertical counts to address memory directly, the circuitry inside the IOU transforms them into the new address signals described below. The transformed display address must meet the following criteria:

- map the 960 bytes of 40-column text into only 1024 bytes
- scan the low-order address to refresh the dynamic RAMs
- continue to refresh the RAMs during video blanking

The requirements of the RAM refreshing are discussed earlier in this chapter in the section "Dynamic-RAM Refreshment."

The transformation involves only horizontal counts H3, H4, and H5, and vertical counts V3 and V4. Vertical count bits VA, VB, and VC address the lines making up the characters, and are not involved in the address transformation. The remaining low-order count bits, H0, H1, H2, V0, V1, and V2 are used directly, and are not involved in the transformation.

The IOU performs an addition that reduces the five significant count bits to four new signals called S0, S1, S2, and S3, where S stands for sum. Figure 7-12 is a diagram showing the addition in binary form, with V3 appearing as the carry in and H5 appearing as its complement H5′. A constant value of 1 appears as the low-order bit of the addend. The carry bit generated with the sum is not used.

If this transformation seems obscure, try it with actual values. For example, for the upper-left corner of the display, the vertical count is 0 and the horizontal count is 24: H0, H1, H2, and H5 are 0's, and H3, and H4 are 1's. The value of the sum is 0, so the memory location for the first character on the display is the first location in the display page, as you might expect.

Horizontal bits H0, H1, and H2 and sum bits S0, S1, and S2 make up the transformed horizontal address (A0 through A6 in Table 7-12). As the horizontal count increases from 24 to 63, the value of the sum (S3 S2 S1 S0) increases from 0 to 4 and the transformed address goes from 0 to 39, relative to the beginning of the display page.

The low-order three bits of the vertical row counter are V0, V1, and V2. These bits control address bits A7, A8, and A9, as shown in Table 7-12, so that rows 0 through 7 start on 127-byte boundaries. When the vertical row counter reaches 8, then V0, V1, and V2 are 0 again, and V3 changes to 1. If you do the addition in Table 7-11 with H equal to 24 (the horizontal count for the first column displayed) and V equal to 8, the sum is 5 and the horizontal address is 40: the first character in row 8 is stored in the memory location 40 bytes from the beginning of the display page.

Figure 7-12 shows how groups of 3 40-character rows are stored in blocks of 120 contiguous bytes starting on 127-byte address boundaries. This diagram is another way of describing the display mapping shown in Figure 2-6. Notice that the 3 rows in each block of 120 bytes are not adjacent on the display.

Table 7-11
Display address transformation

H5′ V4	V3 H5′	H4 V4	V3 Carry in H3 Augend 1 Addend
S3	S2	S1	S0 Sum

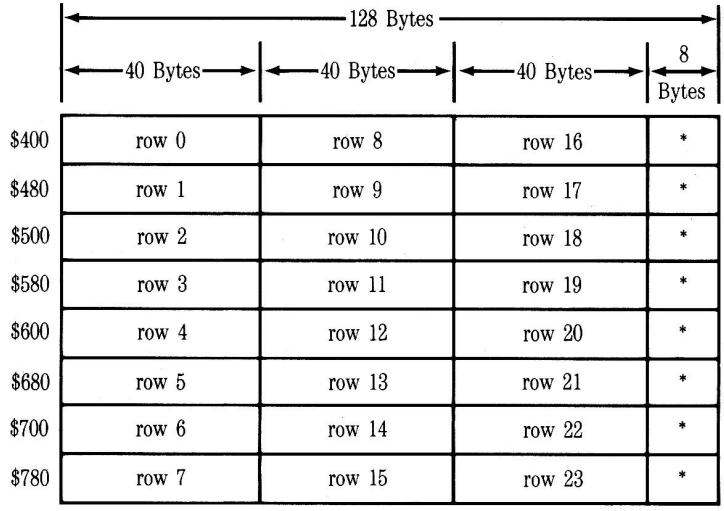

Figure 7-12
40-column text display memory (memory locations marked with an asterisk * are reserved for use by peripheral I/O firmware: refer to the section "Peripheral-Card RAM Space" in Chapter 6)

Table 7-12 shows how the signals from the video counters are assigned to the address lines. H0, H1, and H2 are horizontal-count bits, and V0, V1, and V2 are vertical-count bits. S0, S1, S2 and S3 are the folded address bits described above. Address bits marked with an asterisk (*) are different for different modes: see Table 7-13 and the four subsections under "Video Display Modes."

Table 7-12
Display memory addressing

Memory address bit	Display address bit	Memory address bit	Display address bit
A0	H0	A8	V1
A1	H1	A9	V2
A2	H2	A10	*
A3	S0	A11	*
A4	S1	A12	*
A5	S2	A13	*
A6	S3	A14	*
A7	V0	A15	GND

* For these address bits, see text and Table 7-13.

Table 7-13
Memory address bits for display modes

Address bit	Display modes: Text and low resolution	Display modes: High resolution and double high resolution
A10	80STORE+PAGE2′	VA
A11	80STORE′.PAGE2	VB
A12	0	VC
A13	0	80STORE+PAGE2′
A14	0	80STOREv′.PAGE2

Note: Period (.) means logical AND; prime (′) means logical NOT.

Video display modes

The different display modes all use the address-mapping scheme described in the preceding section, but they use different-sized memory areas in different locations. The next four sections describe the addressing schemes and the methods of generating the actual video signals for the different display modes.

Text displays

The text and low-resolution graphics pages begin at memory locations $0400 and $0800. Table 7-13 shows how the display-mode signals control the address bits to produce these addresses. Address bits A10 and A11 are controlled by the settings of PG2 and 80STORE, which are set by the display-page and 80-column-video soft switches. Address bits A12, A13, and A14 are set to 0. Notice that 80STORE active inhibits PG2: there is only one display page in 80-column mode.

The bit patterns used for generating the different characters are stored in a 32K ROM. The low-order six bits of each data byte reach the character generator ROM directly, via the video data bus VID0–VID5. The two high-order bits are modified by the IOU to select between the primary and alternate character sets and are sent to the character generator ROM on lines RA9 and RA10.

The data for each row of characters are read eight times, once for each of the eight lines of dots making up the row of characters. The data bits are sent to the character generator ROM along with VA, VB, and VC, the low-order bits from the vertical counter. For each character being displayed, the character generator ROM puts out one of eight stored bit patterns selected by the three-bit number made up of VA, VB, and VC.

The bit patterns from the character generator ROM are loaded into the 74166 parallel-to-serial shift register and output as a serial bit stream that goes to the video output circuit. The shift register is controlled by signals named LDPS′ (for load parallel-to-serial shifter) and VID7M (for video 7 MHz). In 40-column mode, LDPS′ strobes the output of the character generator ROM into the shift register once each microsecond, and bits are sent to the screen at a 7 MHz rate.

The addressing for the 80-column display is exactly the same as for the 40-column display: the 40 columns of display memory on the 80-column card are addressed in parallel with the 40 columns in main memory. The data from these two memories reach the video data bus (lines VID0–VID7) via separate 74LS374 three-state buffers. These buffers are loaded simultaneously, but their outputs are sent to the character generator ROM alternately by ø0 and ø1. In 80-column mode, LDPS′ loads data from the character generator ROM into the shift register twice during each microsecond, once during ø0 and once during ø1, and bits are sent to the screen at a 14 MHz rate. Figures 7-13a and 7-13b show the video timing signals.

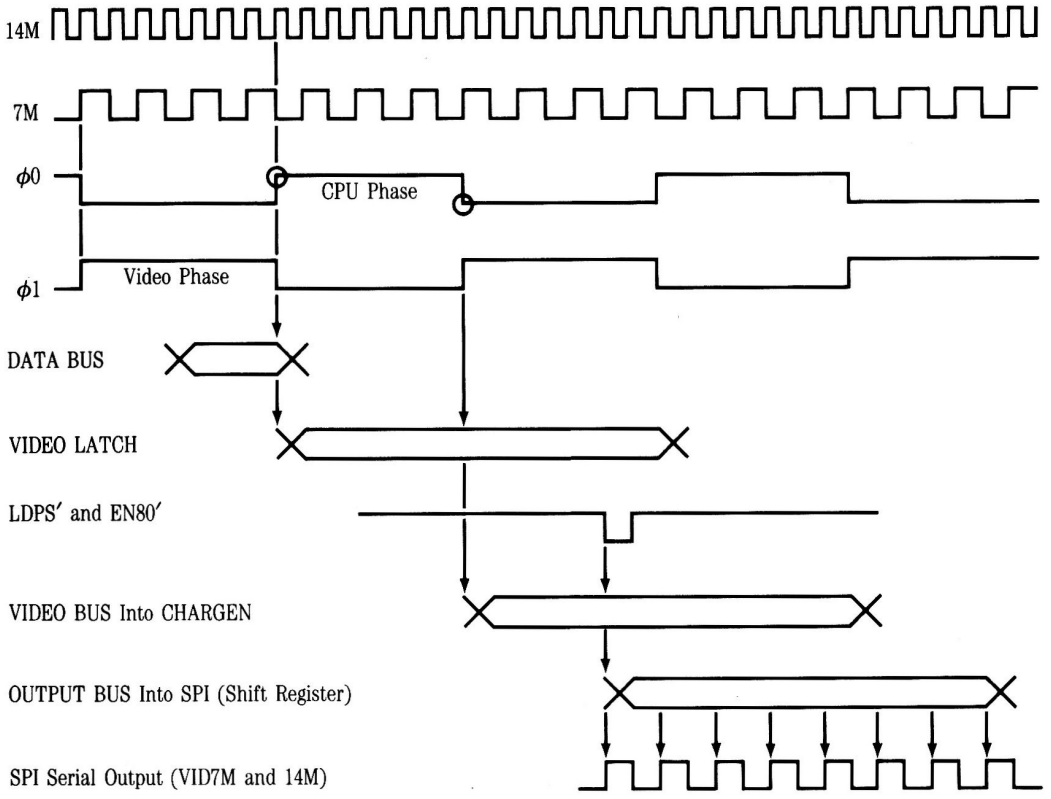

Figure 7-13a
7 MHz video timing signals

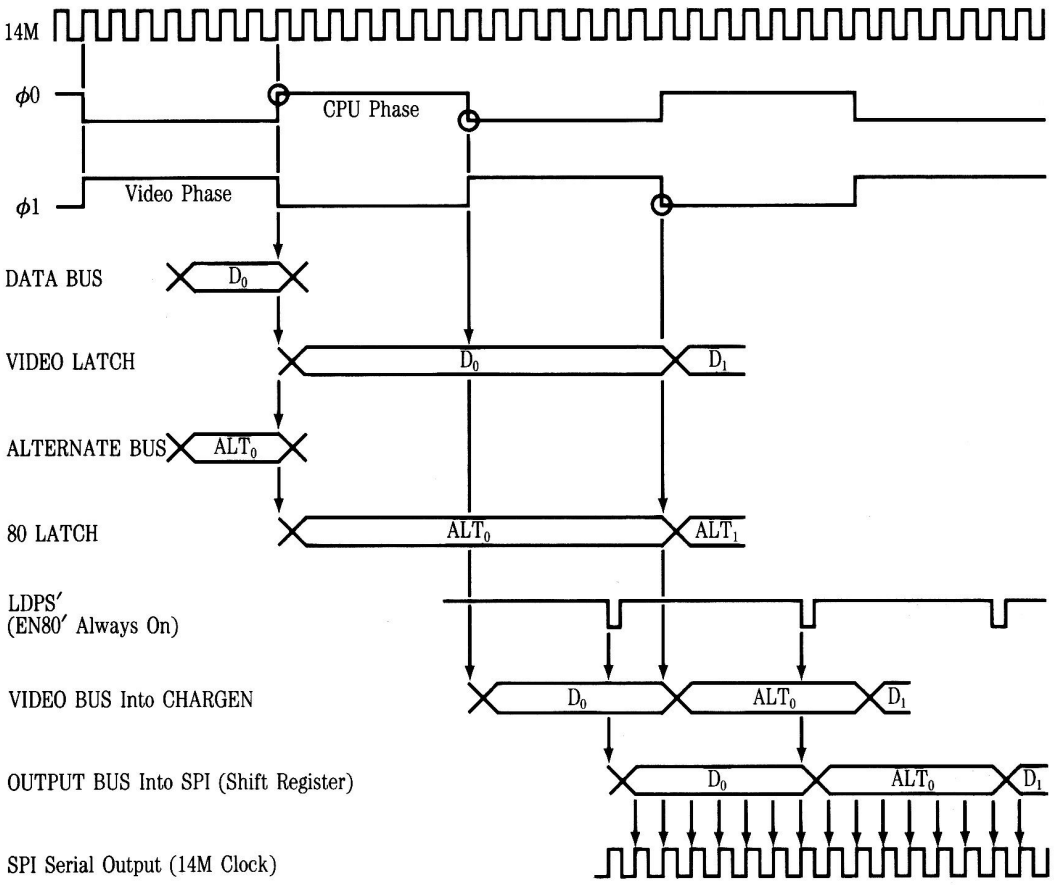

Figure 7-13b
14 MHz video timing signals

Low-resolution display

In the graphics modes, VA and VB are not used by the character generator, so the IOU uses lines SEGA and SEGB to transmit H0 and HIRES', as shown in Table 7-14.

Table 7-14
Character-generator control signals

Display mode	SEGA	SEGB	SEGC
Text	VA	VB	VC
Graphics	H0	HIRES'	VC

The low-resolution graphics display uses VC to divide the eight display lines corresponding to a row of characters into two groups of four lines each. Each row of data bytes is addressed eight times, the same as in text mode, but each byte is interpreted as two nibbles. Each nibble selects one of 16 colors. During the upper four of the eight display lines, VC is low and the low-order nibble determines the color. During the lower four display lines, VC is high and the high-order nibble determines the color.

The bit patterns that produce the low-resolution colors are read from the character-generator ROM in the same way the bit patterns for characters are produced in text mode. The 74166 parallel-to-serial shift register converts the bit patterns to a serial bit stream for the video circuits.

The video signal generated by the Apple IIe includes a short burst of 3.58 MHz signal that is used by an NTSC color monitor or color TV set to generate a reference 3.58 MHz color signal. The Apple IIe's video signal produces color by interacting with this 3.58 MHz signal inside the monitor or TV set. Different bit patterns produce different colors by changing the duty cycles and delays of the bit stream relative to the 3.58 MHz color signal. To produce the small delays required for so many different colors, the shift register runs at 14 MHz and shifts out 14 bits during each cycle of the 1 MHz data clock. To generate a stream of fourteen bits from each eight-bit pattern read from the ROM, the output of the shift register is connected back to the register's serial input to repeat the same eight bits; the last two bits are ignored the second time around.

Each bit pattern is output for the same amount of time as a character: 0.98 microseconds. Because that is exactly enough time for three and a half cycles of the 3.58 MHz color signal, the phase relationship between the bit patterns and the signal changes by a half cycle for each successive pattern. To compensate for this, the character generator ROM puts out one of two different bit patterns for each nibble, depending on the state of H0, the low-order bit of the horizontal counter.

High-resolution display

The high-resolution graphics pages begin at memory locations $2000 and $4000 (decimal 8192 and 16384). These page addresses are selected by address bits A13 and A14. In high-resolution mode, these address bits are controlled by PG2 and 80STORE, the signals controlled by the display-page (PAGE2) and 80-column-video (80COL) soft switches. As in text mode, 80STORE inhibits addressing of the second page because there is only one page of 80-column text available for mixed mode.

In high-resolution graphics mode, the display data are still stored in blocks like the one shown in Figure 7-12, but there are eight of these blocks. As Tables 7-12 and 7-13 show, vertical counts VA, VB, and VC are used for address bits A10, A11, and A12, which address eight blocks of 1024 bytes each. Remember that in the display, VA, VB, and VC count adjacent horizontal lines in groups of eight. This addressing scheme maps each of those lines into a different 1024-byte block. It might help to think of it as a kind of eight-way multiplexer: it's as if eight text displays were combined to produce a single high-resolution display, with each text display providing one line of dots in turn, instead of a row of characters.

The high-resolution bit patterns are produced by the character-generator ROM. In this mode, the bit patterns simply reproduce the eight bits of display data. The low-order six bits of data reach the ROM via the video data bus VID0–VID5. The IOU sends the other two data bits to the ROM via RA9 and RA10.

The high-resolution colors described in Chapter 2 are produced by the interaction between the video signal the bit patterns generate and the 3.58 MHz color signal generated inside the monitor or TV set. The high-resolution bit patterns are always shifted out at 7 MHz, so each dot corresponds to a half-cycle of the 3.58 MHz color signal. Any part of the video signal that produces a single white dot between two black dots, or vice versa, is effectively a short burst of 3.58 MHz and is therefore displayed as color. In other words, a bit pattern consisting of alternating 1's and 0's gets displayed as a line of color. The high-resolution graphics subroutines produce the appropriate bit patterns by masking the data bits with alternating 1's and 0's.

To produce different colors, the bit patterns must have different phase relationships to the 3.58 MHz color signal. If alternating 1's and 0's produce a certain color, say green, then reversing the pattern to 0's and 1's will produce the complementary color, purple. As in the low-resolution mode, each bit pattern corresponds to three and a half cycles of the color signal, so the phase relationship between the data bits and the color signal changes by a half cycle for each successive byte of data. Here, however, the bit patterns produced by the hardware are the same for adjacent bytes; the color compensation is performed by the high-resolution software, which uses different color masks for data being displayed in even and odd columns.

To produce other colors, bit patterns must have other timing relationships to the 3.58 MHz color signal. In high-resolution mode, the Apple IIe produces two more colors by delaying the output of the shift register by half a dot (70 ns), depending on the high-order bit of the data byte being displayed. (The high-order bit doesn't actually get displayed as a dot, because at 7 MHz there is only time to shift out seven of the eight bits.)

As each byte of data is sent from the character generator to the shift register, high-order data bit D7 is also sent to the PAL device. If D7 is off, the PAL device transmits shift-register timing signals LDPS′ and VID7M normally. If D7 is on, the PAL device delays LDPS′ and VID7M by 70 nanoseconds, the time corresponding to half a dot. The bit pattern that formerly produced green now produces orange; the pattern for purple now produces blue.

- *A note about timing:* For 80-column text, the shift register is clocked at twice normal speed. When 80-column text is used with graphics in mixed mode, the PAL device controls shift-register timing signals LDPS′ and VID7M so that the graphics portion of the display works correctly even when the text window is in 80-column mode.

Double high-resolution display

Double high-resolution graphics mode displays two bytes in the time normally required for one, but uses high-resolution graphics Page 1 in both main and auxiliary memory instead of text or low-resolution Page 1.

- *Note:* There is a second pair of pages, high-resolution Page 2, which can be used to display a second double high-resolution page.

Double high-resolution graphics mode displays each pair of data bytes as 14 adjacent dots, seven from each byte. The high-order bit (color-select bit) of each byte is ignored. The auxiliary-memory byte is displayed first, so data from auxiliary memory appears in columns 0–6, 14–20, and so on, up to columns 547–552. Data from main memory appears in columns 7–13, 21–27, and so on, up to 553–559.

As in 80-column text, there are twice as many dots across the display screen, so the dots are only half as wide. On a TV set or low-bandwidth monitor (less than 14 MHz), single dots will be dimmer than normal.

❖ *Note:* Except for some expensive RGB-type monitors, any video monitor with a bandwidth as high as 14 MHz will be a monochrome monitor. Monochrome means one color: a monochrome video monitor can have a screen color of white, green, orange, or any other single color.

The main memory and auxiliary memory are connected to the address bus in parallel, so both are activated during the display cycle. The rising edge of ø0 clocks a byte of main memory data into the video latch, and a byte of auxiliary memory data into the 80 latch.

ø1 enables output from the (auxiliary) 80 latch, and ø0 enables output from the (main) video latch. Output from both latches goes to CHARGEN, where GR and SEGB′ select high-resolution graphics. LDPS operates at 2 MHz in this mode, alternately gating the auxiliary byte and main byte into the parallel-to-serial shift register. VID7M is active (kept true) for double high-resolution display mode, so when it is ANDed with 14M, the result is still 14M. The 14M serial clock signal gate shift register then outputs to VID, the video display hybrid circuit, for output to the display device.

Video output signals

The stream of video data generated by the display circuits described above goes to a linear summing circuit built around transistor Q1 where it is mixed with the sync signals and the color burst. Resistors R3, R5, R7, R10, R13, and R15 adjust the signals to the proper amplitudes, and a tank circuit (L3 and C32) resonant at 3.58 MHz conditions the color burst.

The resulting video signal is an NTSC-compatible composite-video signal that can be displayed on a standard video monitor. The signal is similar to the EIA (Electronic Industries Association) standard positive composite video (see Table 7-15). This signal is available in two places in the Apple IIe:

- At the phono jack on the back of the Apple IIe. The sleeve of this jack is connected to ground and the tip is connected to the video output through a resistor network that attenuates it to about 1 volt and matches its impedance to 75 ohms.
- At the internal video connector on the Apple IIe circuit board near the RCA jack, J13 in Figure 7-15c. It is made up of four Molex-type pins, 0.25 inches tall, on 0.10-inch centers. This connector carries the video signal, ground, and two power supplies, as shown in Table 7-15.

Table 7-15
Internal video connector signals

Pin	Signal	Description
1	GROUND	System common ground.
2	VIDEO	NTSC-compatible positive composite video. White level is about 2.0 volts, black level is about 0.75 volts, and sync level is 0.0 volts. This output is not protected against short-circuits.
3	–5V	–5 volt power supply.
4	+12V	+12 volt power supply.

Built-in I/O circuits

The use of the Apple IIe's built-in I/O features is described in Chapter 2. This section describes the hardware implementation of all of those features except the video display described in the previous sections.

The IOU (Input/Output Unit) directly generates the output signals for the speaker, the cassette interface, and the annunciators. The other I/O features are handled by smaller ICs, as described later in this section.

The addresses of the built-in I/O features are described in Chapter 2 and listed in Tables 2-1, 2-10, and 2-11. All of the built-in I/O features except the displays use memory locations between $C000 and $C070 (decimal 49152 and 49264). The I/O address decoding is performed by three ICs: a 74LS138, a 74LS154, and a 74LS251.

The 74LS138 decodes address lines A8, A9, A10, and A11 to select address pages on 256-byte boundaries starting at $C000 (decimal 49152). When it detects addresses between $C000 and $C0FF, it enables the IOU and the 74LS154. The 74LS154 in turn decodes address lines A4, A5, A6, and A7 to select 16-byte address areas between $C000 and $C0FF. Addresses between $C060 and $C06F enable the 74LS251 that multiplexes the hand control switches and paddles; addresses between $C070 and $C07F reset the NE558 quadruple timer that interfaces to the hand controls, as described later in the section "Game I/O Signals."

The keyboard

The Apple IIe's keyboard is a matrix of keyswitches connected to an AY-3600–type keyboard decoder via a ribbon cable and a 26-pin connector. The AY-3600 scans the array of keys over and over to detect any keys pressed. The scanning rate is set by the external resistor-capacitor network made up of C70 and R32. The debounce time is also set externally, by C71.

The AY-3600's outputs include five bits of key code plus separate lines for Control, Shift, any-key-down, and keyboard strobe. The any-key-down and keyboard-strobe lines are connected to the IOU, which addresses them as soft switches. The key-code lines, along with Control and Shift, are inputs to a separate 2316 ROM. The ROM translates them to the character codes that are enabled onto the data bus by signals named KBD′ and ENKBD′. The KBD′ signal is enabled by the MMU whenever a program reads location $C000, as described in the section "Reading the Keyboard" in Chapter 2.

Table 7-16
Keyboard connector signals

Pin	Signal	Description
1,2,4,6,8,10, 23,25,12,22	Y0–Y9	Y-direction key-matrix connections
3	+5	+5 volt supply
5,7,9,15	n.c.	
11	LCNTL′	Line from Control key

Table 7-16 (continued)
Keyboard connector signals

Pin	Signal	Description
13	GND	System common ground
14,18,16,20, 21,19,26,17	X0–X7	X-direction key-matrix connections
24	LSHFT'	Line from Shift key

Connecting a keypad

There is a smaller connector wired in parallel with the keyboard connector in the original and the enhanced IIe. You can connect a ten-key numeric pad to the Apple IIe via this connector.

Extended keyboard IIe

The extended keyboard IIe has a numeric keypad built into the keyboard.

Table 7-17
Keypad connector signals

Pin	Signal	Description
1,2,5,3,4,6	Y0–Y5	Y-direction key-matrix connections
7	n.c.	
9,11,10,8	X4–X7	X-direction key-matrix connections

Cassette I/O

The two miniature phone jacks on the back of the Apple IIe are used to connect an audio cassette recorder for saving programs. The output signal to the cassette recorder comes from a pin on the IOU via resistor network R6 and R9, which attenuates the signal to a level appropriate for the recorder's microphone input. Input from the recorder is amplified and conditioned by a type 741 operational amplifier and sent to one of the inputs of the 74LS251 input multiplexer.

The signal specifications for cassette I/O are

- Input: 1 volt (nominal) from recorder earphone or monitor output. Input impedance is 12K ohms.
- Output: 25 millivolts to recorder microphone input. Output impedance is 100 ohms.

Table 7-18
Speaker connector signals

Pin	Signal	Description
1	SPKR	Speaker signal. This line will deliver about 0.5 watt into an 8-ohm speaker.
2	+5	+5V power supply. Note that the speaker is not connected to system ground.

The speaker

The Apple IIe's built-in loudspeaker is controlled by a single bit of output from the IOU (Input Output Unit). The signal from the IOU is AC coupled to Q5, an MPSA13 Darlington transistor amplifier. The speaker connector is a Molex KK100 connector, J18 in Figure 7-15b, with two square pins 0.25 inches tall and on 0.10-inch centers.

A light-emitting diode is connected in parallel across the speaker pins such that, when the speaker is not connected, the diode glows whenever the speaker signal is on. This diode is used as a diagnostic indicator during assembly and testing of the Apple IIe.

Game I/O signals

Several I/O signals that are individually controlled via soft switches are collectively referred to as the game signals. Even though they are normally used for hand controls, these signals can be used for other simple I/O applications. There are five output signals: the four annunciators, numbered A0 through A3, and one strobe output. There are three one-bit inputs, called *switches* and numbered SW0 through SW2, and four analog inputs, called *paddles* and numbered PDL0 through PDL3.

The annunciator outputs are driven directly by the IOU (Input Output Unit). These outputs can drive one **TTL (transistor-transistor logic)** load each; for heavier loads, you must use a transistor or a TTL buffer on these outputs. These signals are only available on the 16-pin internal connector. (See Table 7-19.)

The strobe output is a pulse transmitted any time a program reads or writes to location $C040. The strobe pin is connected to one output of the 74LS154 address decoder. This TTL signal is normally high; it goes low during ø0 of the instruction cycle that addresses location $C040. This signal is only available on the 16-pin internal connector. (See Table 7-19.)

The game inputs are multiplexed along with the cassette input signal by a 74LS251 eight-input multiplexer enabled by the C06X' signal from the 74LS154 I/O address decoder. Depending on the low-order address, the appropriate game input is connected to bit 7 of the data bus.

The switch inputs are standard low-power Schottky TTL inputs. To use them, connect each one to 560-ohm pull-down resistors connected to the ground and through single-pole, momentary-contact pushbutton switches to the +5 volt supply.

The hand-control inputs are connected to the timing inputs of an NE558 quadruple 555-type analog timer. Addressing $C07X sends a signal from the 74LS154 that resets all four timers and causes their outputs to go to 1 (high). A variable resistance of up to 150K ohms connected between one of these inputs and the +5V supply controls the charging time of one of four 0.022-microfarad capacitors. When the voltage on the capacitor passes a certain threshold, the output of the NE558 changes back to 0 (low). Programs can determine the setting of a variable resistor by resetting the timers and then counting time until the selected timer-input changes from high to low. The resulting count is proportional to the resistance.

The game I/O signals are all available on a 16-pin DIP socket labeled GAME I/O on the main circuit board inside the case. The switches and the paddles are also available on a D-type miniature connector on the back of the Apple IIe; see J8 and J15 in Figure 7-15d (Figure 7-16d for the extended keyboard IIe).

Table 7-19
Game I/O connector signals

Internal connector pin	Back-panel connector pin	Signal	Description
1	2	+5V	+5V power supply. Total current drain from this pin must not exceed 100mA.
2,3,4	7,1,6	PB0–PB2	Switch inputs. These are standard 74LS inputs.
5	—	STROBE'	Strobe output. This line goes low during øo of a read or write instruction to location $C040.
6,10, 7,11	5,8,4,9	PDL0–PDL3	Hand control inputs. Each of these should be connected to a 150K-ohm variable resistor connected to +5V.

Table 7-19 (continued)
Game I/O connector signals

Internal connector pin	Back-panel connector pin	Signal	Description
8	3	GND	System ground.
15,14, 13,12	—	AN0–AN3	Annunciators. These are standard 74LS TTL outputs and must be buffered to drive other than TTL inputs.
9,16	—	n.c.	Nothing is connected to these pins.

Expanding the Apple IIe

Chapter 6 describes the standards for programming peripheral cards for the Apple IIe.

The main circuit board of the Apple IIe has eight empty card connectors or slots on it. These slots make it possible to add features to the Apple IIe by plugging in peripheral cards with additional hardware. This section describes the hardware that supports them, including all of the signals available on the expansion slots.

The expansion slots

The seven connectors lined up across the back part of the Apple IIe's main circuit card are the expansion slots, also called peripheral slots or simply slots, numbered from 1 to 7. They are 50-pin PC-card edge connectors with pins on 0.10-inch centers. A PC card plugged into one of these connectors has access to all of the signals necessary to perform input and output and to execute programs in RAM or ROM on the card. These signals are described briefly in Table 7-20. The following paragraphs describe the signals in general and mention a few points that are often overlooked. For further details, refer to the schematic diagram in Figures 7-15a–d (Figure 7-16a–d for the extended keyboard IIe).

The peripheral address bus

The microprocessor's address bus is buffered by two 74LS244 octal three-state buffers. These buffers, along with a buffer in the microprocessor's R/W' line, are enabled by a signal derived from the DMA' daisy chain on the expansion slots. Pulling the peripheral line DMA' low disables the address and R/W' buffers so that peripheral DMA circuitry can control the address bus. The DMA address and R/W' signals supplied by a peripheral card must be stable all during ø0 of the instruction cycle, as shown in Figure 7-14.

Another signal that can be used to disable normal operation of the Apple IIe is INH' . Pulling INH' low disables all of the memory in the Apple IIe except the part in the I/O space from $C000 to $CFFF. A peripheral card that uses either INH' or DMA' must observe proper timing; in order to disable RAM and ROM cleanly, the disabling signal must be stable all during ø0 of the instruction cycle (refer to the timing diagram in Figure 7-14).

The peripheral devices should use I/O SELECT' and DEVICE SELECT' as enables. Most peripheral ICs require their enable signals to be present for a certain length of time before data is strobed into or out of the device. Remember that I/O SELECT' and DEVICE SELECT' are only asserted during ø0 high.

The peripheral data bus

The Apple IIe has two versions of the microprocessor data bus: an internal bus, MD0-MD7, connected directly to the microprocessor; and an external bus, D0-D7, driven by a 74LS245 octal bidirectional bus buffer. The 65C02 is fabricated with MOS circuitry, so it can drive capacitive loads of up to about 130 pF. If peripheral cards are installed in all seven slots, the loading on the data bus can be as high as 500 pF, so the 74LS245 drives the data bus for the peripheral cards. The same argument applies if you use MOS devices on peripheral cards: they don't have enough drive for the fully loaded bus, so you should add buffers.

Loading and driving rules

Table 7-20 shows the drive requirements and loading limits for each pin on the expansion slots. The address bus, the data bus, and the R/W' line should be driven by three-state buffers. Remember that there is considerable distributed capacitance on these buses and that you should plan on tolerating the added load of up to six additional peripheral cards. MOS devices such as PIAs and ACIAs cannot switch such heavy capacitive loads. Connecting such devices directly to the bus will lead to possible timing and level errors.

Interrupt and DMA daisy chains

The interrupt requests (IRQ' and NMI') and the direct-memory access (DMA') signal are available at all seven expansion slots. A peripheral card requests an interrupt or a DMA transfer by pulling the appropriate output line low (active). If two peripheral cards request an interrupt or a DMA transfer at the same time, they will contend for the data and address busses. To prevent this, two pairs of pins on each connector are wired as a priority daisy chain. The daisy-chain pins for interrupts are INT IN and INT OUT, and the pins for DMA are DMA IN and DMA OUT, as shown for J1–J7 in Figure 7-15d (Figure 7-16d for the extended keyboard IIe).

Each daisy chain works like this: the output from each connector goes to the input of the next higher numbered one. For these signals to be useful for cards in lower numbered connectors, all of the higher numbered connectors must have cards in them, and all of those cards must connect DMA IN to DMA OUT and INT IN to INT OUT. Whenever a peripheral card uses pin DMA', it must do so only if its DMA IN line is active, and it must disable its DMA OUT line while it is using DMA'. The INT IN and INT OUT lines must be used the same way: enable the card's interrupt circuits with INT IN, and disable INT OUT whenever IRQ' or NMI' is being used.

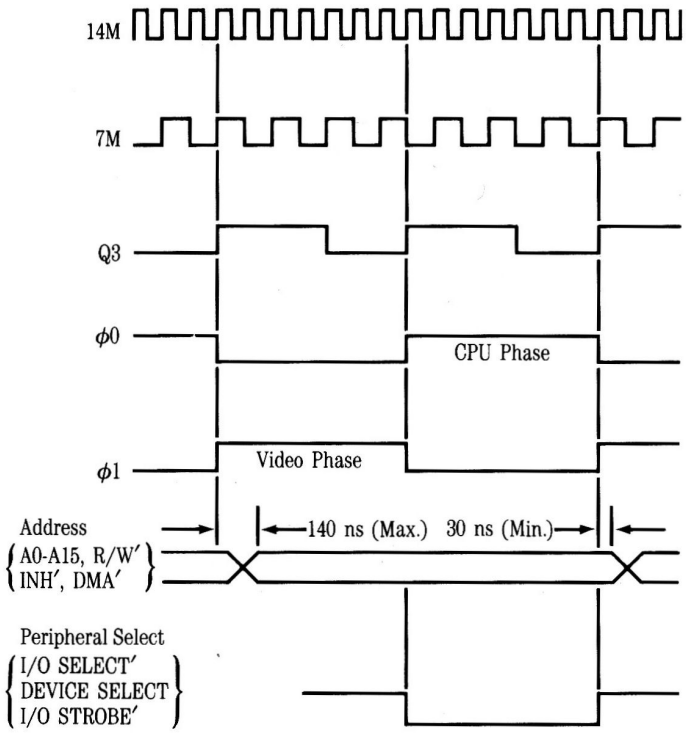

Figure 7-14
Peripheral-signal timing

Table 7-20
Expansion slot signals

Pin	Signal	Description
1	I/O SELECT	Normally high; goes low during ø0 when the 65C02 addresses location $CnXX, where n is the connector number. This line can drive 10 LS TTL loads.*
2–17	A0–A15	Three-state address bus. The address becomes valid during ø1 and remains valid during ø0. Each address line can drive 5 LS TTL loads.*
18	R/W′	Three-state read/write line. Valid at the same time as the address bus; high during a read cycle, low during a write cycle. It can drive 2 LS TTL loads.*

Table 7-20 (continued)
Expansion slot signals

Pin	Signal	Description
19	SYNC′	Composite horizontal and vertical sync,on expansion slot 7 *only*. This line can drive 2 LS TTL loads.*
20	I/O STROBE′	Normally high; goes low during ø0 when the 65C02 addresses a location between $C800 and $CFFF. This line can drive 4 LS TTL loads.
21	RDY	Input to the 65C02. Pulling this line low during ø1 halts the 65C02 with the address bus holding the address of the location currently being fetched. This line has a 3300 ohm pullup resistor to +5V.
22	DMA′	Input to the address bus buffers. Pulling this line low during ø1 disconnects the 65C02 from the address bus. This line has a 3300 ohm pullup resistor to +5V.
23	INT OUT	Interrupt priority daisy-chain output. Usually connected to pin 28 (INT IN).†
24	DMA OUT	DMA priority daisy-chain output. Usually connected to pin 22 (DMA IN).
25	+5V	+5-volt power supply. A total of 500mA is available for all peripheral cards.
26	GND	System common ground.
27	DMA IN	DMA priority daisy-chain input. Usually connected to pin 24 (DMA OUT).
28	INT IN	Interrupt priority daisy-chain input. Usually connected to pin 23 (INT OUT).
29	NMI′	Nonmaskable interrupt to 65C02. Pulling this line low starts an interrupt cycle with the interrupt-handling routine at location $03FB. This line has a 3300 ohm pullup resistor to +5V.

Table 7-20 (continued)
Expansion slot signals

Pin	Signal	Description
30	IRQ′	Interrupt request to 65C02. Pulling this line low starts an interrupt cycle only if the interrupt-disable (I) flag in the 65C02 is not set. Uses the interrupt-handling routine at location $03FE. This line has a 3300 ohm pullup resistor to +5V.
31	RES′	Pulling this line low initiates a reset routine, as described in Chapter 4.
32	INH′	Pulling this line low during ø1 inhibits (disables) the memory on the main circuit board. This line has a 3300 ohm pullup resistor to +5V.
33	–12V	–12 volt power supply. A total of 200mA is available for all peripheral cards.
34	–5V	–5 volt power supply. A total of 200mA is available for all peripheral cards.
35	3.58M	3.58 MHz color reference signal, on slot 7 *only*. This line can drive 2 LS TTL loads.*
36	7M	System 7 MHz clock. This line can drive 2 LS TTL loads.*
37	Q3	System 2 MHz asymmetrical clock. This line can drive 2 LS TTL loads.*
38	ø1	65C02 phase 1 clock. This line can drive 2 LS TTL loads.*
39	µPSYNC	The 65C02 signals an operand fetch by driving this line high during the first read cycle of each instruction.
40	ø0	65C02 phase 0 clock. This line can drive 2 LS TTL loads.*
41	DEVICE SELECT′	Normally high; goes low during ø0 when the 65C02 addresses location $C0nX, where n is the connector number plus 8. This line can drive 10 LS TTL loads.*

Table 7-20 (continued)
Expansion slot signals

Pin	Signal	Description
42-49	D0–D7	Three-state buffered bi-directional data bus. Data becomes valid during ø0 high and remains valid until ø0 goes low. Each data line can drive one LS TTL load.*
50	+12V	+12 volt power supply. A total of 250mA is available for all peripheral cards.

* Loading limits are for each card.
† On slot 7 only, this pin can be connected to the graphics-mode signal GR: see text for details.

The auxiliary slot

The large connector at the left side of the Apple IIe's main circuit card is the auxiliary slot. It is a 60-pin PC-card edge connector with pins on 0.10-inch centers. A PC card plugged into this connector has access to all of the signals used in producing the video display. These signals are described briefly in Table 7-21. For further details, refer to the schematic diagram in Figure 7-15a–d (Figure 7-16a–d for the extended keyboard IIe).

Many of the internal signals that are not available on the expansion slots are on the auxiliary slot. By using both kinds of connectors, manufacturing and repair personnel can gain access to most of the signals needed for diagnosing problems in the Apple IIe.

Important In the extended keyboard IIe, the auxiliary slot is already occupied by the Extended 80-Column Text Card.

80-column display signals

The additional memory needed for producing an 80-column text display is on the 80-column text card, along with the buffers that transfer the data to the video data bus, as described earlier in this chapter in the section "Text Displays." The signals that control the 80-column text data include the system clocks ø0 and ø1, the multiplexed RAM address RA0–RA7, the RAM address-strobe signals PRAS′ and PCAS′, and the auxiliary-RAM enable signals, EN80′ and R/W80.

The EN80′ enable signal is controlled by the 80STORE soft switch described in Chapter 4. Data is sent to the auxiliary memory via the internal data bus MD0–MD7; the data is transferred to the video generator via the video data bus VID0–VID7.

Table 7-21
Auxiliary slot signals

Pin	Signal	Description
1	3.58M	3.58 MHz video color reference signal. This line can drive two LS TTL loads.
2	VID7M	Clocks the video dots out of the 74166 parallel-to-serial shift register. This line can drive two LS TTL loads.
3	SYNC′	Video horizontal and vertical sync signal. This line can drive two LS TTL loads.
4	PRAS′	Multiplexed RAM row-address strobe. This line can drive two LS TTL loads.
5	VC	Third low-order vertical-counter bit. This line can drive two LS TTL loads.
6	C07X′	Hand-control reset signal. This line can drive two LS TTL loads.
7	WNDW′	Video nonblank window. This line can drive two LS TTL loads.
8	SEGA	First low-order vertical counter bit. This line can drive two LS TTL loads.
51,10,49, 48,13,14, 46,9	RA0–RA7	Multiplexed RAM-address bus. This line can drive two LS TTL loads.
11,12	ROMEN1, ROMEN2	Enable signals for the ROMs on main circuit board.
44,43,40, 39,21,20, 17,16	MD0–MD7	Internal (unbuffered) data bus. This line can drive two LS TTL loads.

Table 7-21 (continued)
Auxiliary slot signals

Pin	Signal	Description
45,42,41, 38,22,19, 18,15	VID0–VID7	Video data bus. This three-state bus carries video data to the character generator.
23	ø0	65C02 clock phase 0. This line can drive two LS TTL loads.
24	CLRGAT′	Color-burst gating signal. This line can drive two LS TTL loads.
25	80VID′	Enables 80-column display timing. This line can drive two LS TTL loads.
26	EN80′	Enable for auxiliary RAM. This line can drive two LS TTL loads.
27	ALTVID′	Alternative video output to the video summing amplifier.
28	SEROUT′	Video serial output from 74166 parallel-to-serial shift register.
29	ENVID′	Normally low; driving this line high disables the character generator such that the video dots from the shift register are all high (white), and alternative video can be sent out via ALTVID. This line has a 1000 ohm pulldown resistor to ground.
30	+5	+5 volt power supply.
31	GND	System common ground.
32	14M	14.3 MHz master clock signal. This line can drive two LS TTL loads.
33	PCAS′	Multiplexed column-address strobe. This line can drive two LS TTL loads.
34	LDPS′	Strobe to video parallel-to-serial shift register. This signal goes low to load the contents of the video data bus into the shift register. This line can drive two LS TTL loads.

Table 7-21 (continued)
Auxiliary slot signals

Pin	Signal	Description
35	R/W80	Read/write signal for RAM on the card in this slot. This line can drive two LS TTL loads.
36	ø1	65C02 clock phase 1. This line can drive two LS TTL loads.
37	CASEN′	Column-address enable. This signal is disabled (held high) during accesses to memory on the card in this slot.This line can drive two LS TTL loads.
47	H0	Low-order horizontal byte counter.This line can drive two LS TTL loads.
50	AN3	Output of annunciator number 3.This line can drive two LS TTL loads.
52	R/W′	65C02 read/write signal. This line can drive two LS TTL loads.
53	Q3	2 MHz asymmetrical clock. This line can drive two LS TTL loads.
54	SEGB	Second low-order vertical-counter bit. This line can drive two LS TTL loads.
55	FRCTXT′	Normally high; pulling this line low enables 14MHz video output even when GR is active.
56,57	RA9′,RA10′	Character-generator control signals from the IOU. This line can drive two LS TTL loads.
58	GR	Graphics-mode enable signal. This line can drive two LS TTL loads.
59	7M	7 MHz timing signal. This line can drive two LS TTL loads.
60	ENTMG′	Normally low; pulling this line high disables the master timing from the PAL device. This line has a 1000 ohm pulldown resistor to ground.

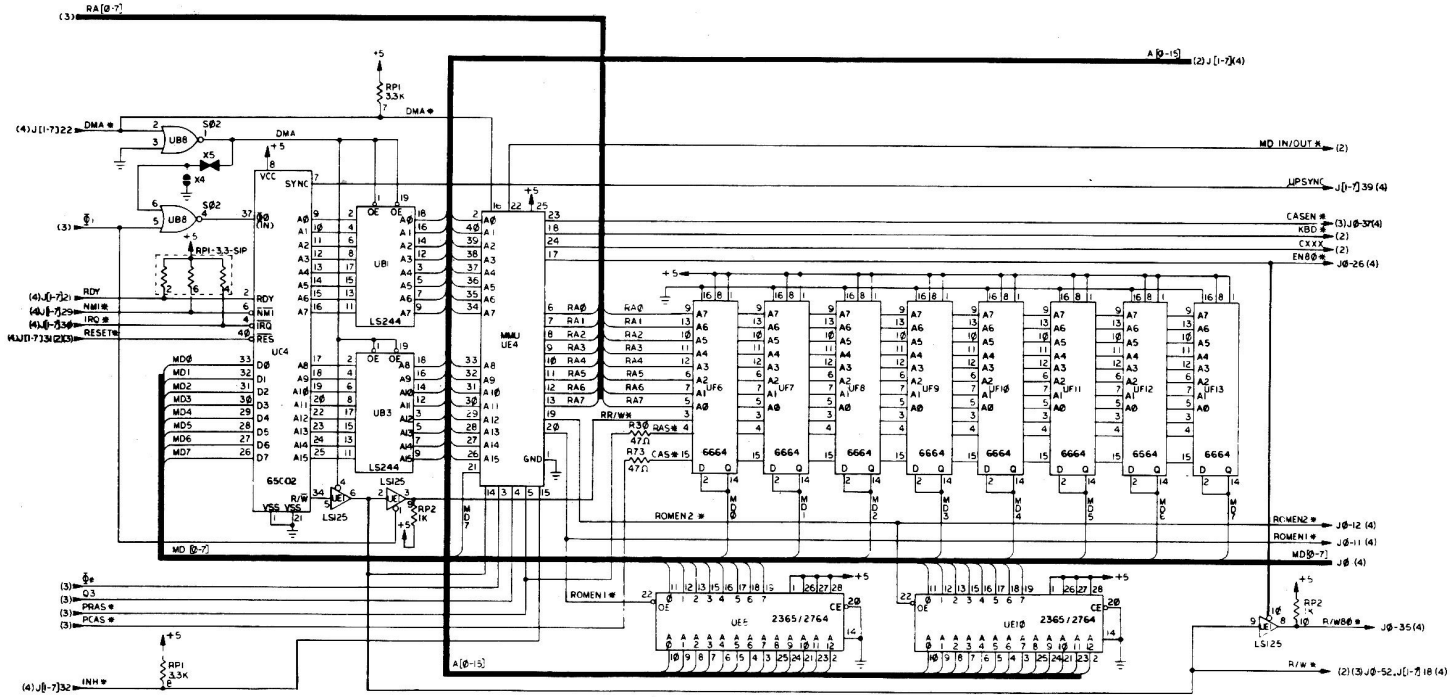

Figure 7-15a
Original and enhanced IIe schematic diagram, part 1

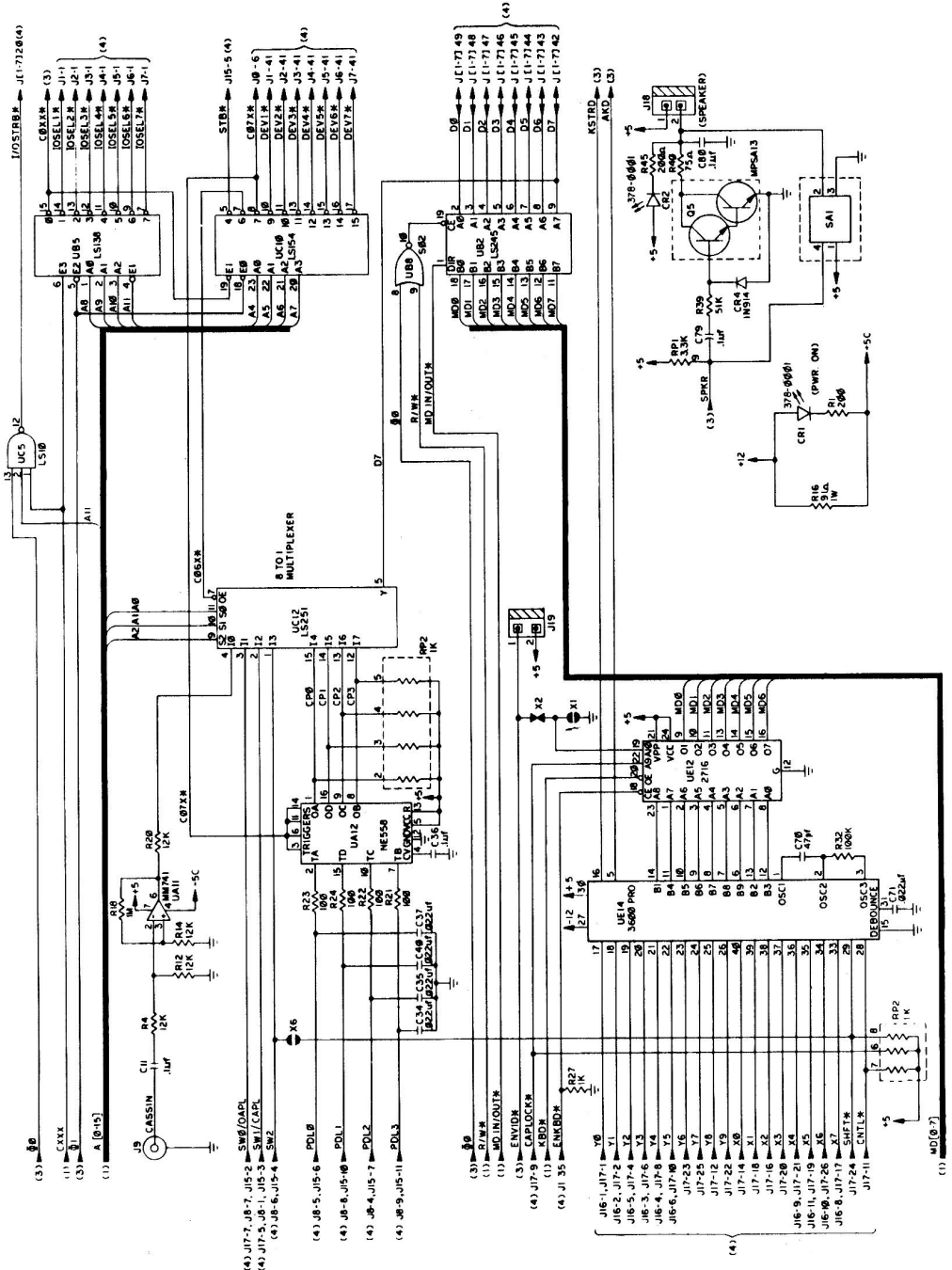

Figure 7-15b
Original and enhanced IIe schematic diagram, part 2

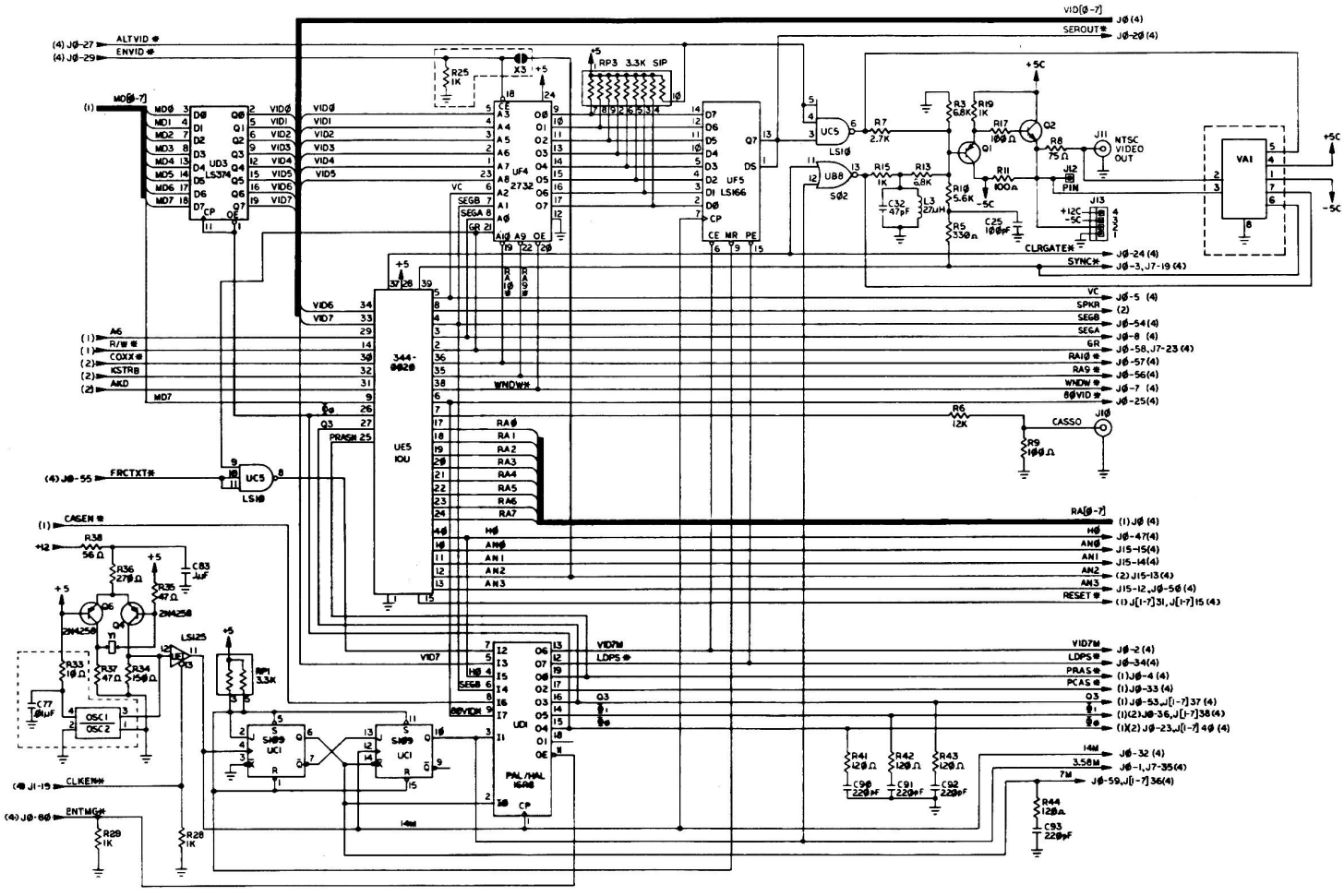

Figure 7-15c
Original and enhanced IIe schematic diagram, part 3

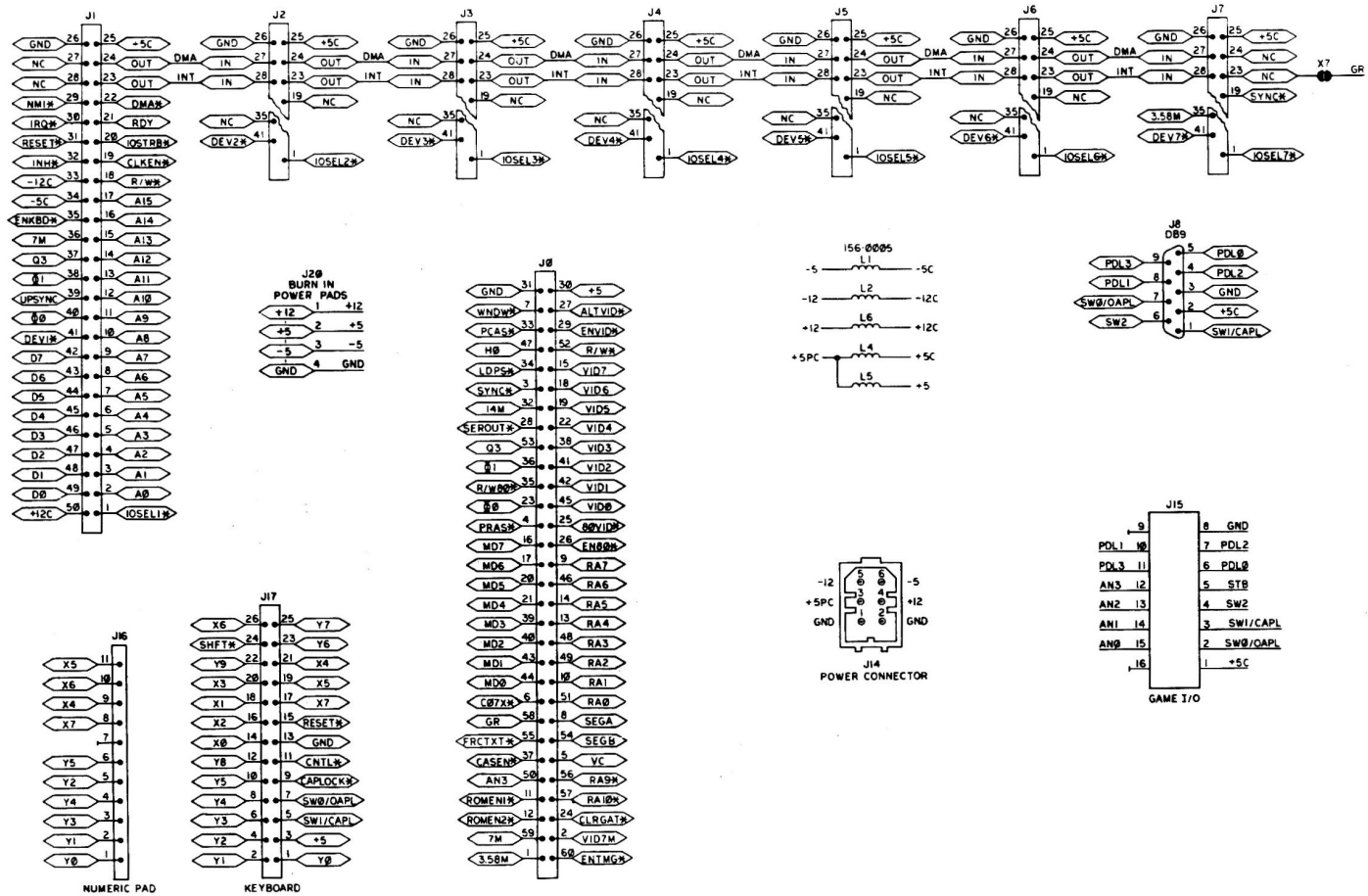

Figure 7-15d
Original and enhanced IIe schematic diagram, part 4

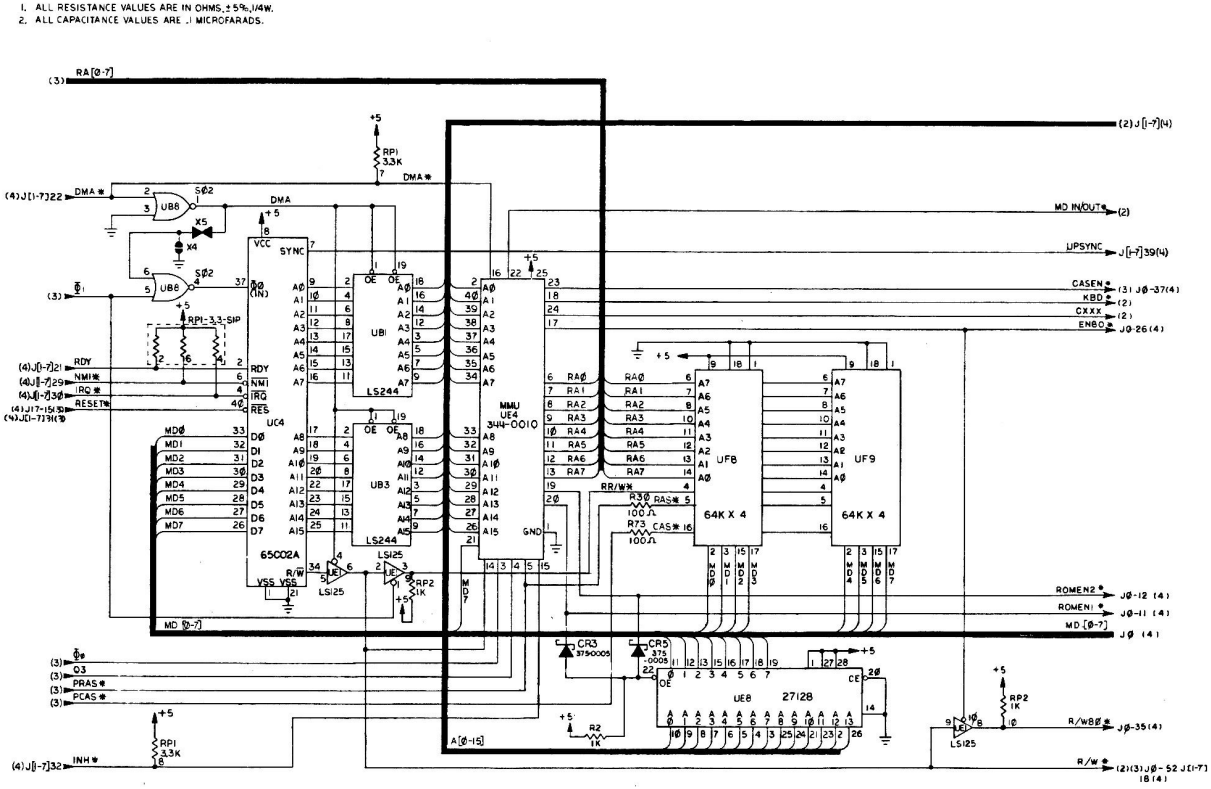

Figure 7-16a
Extended keyboard IIe schematic diagram, part 1

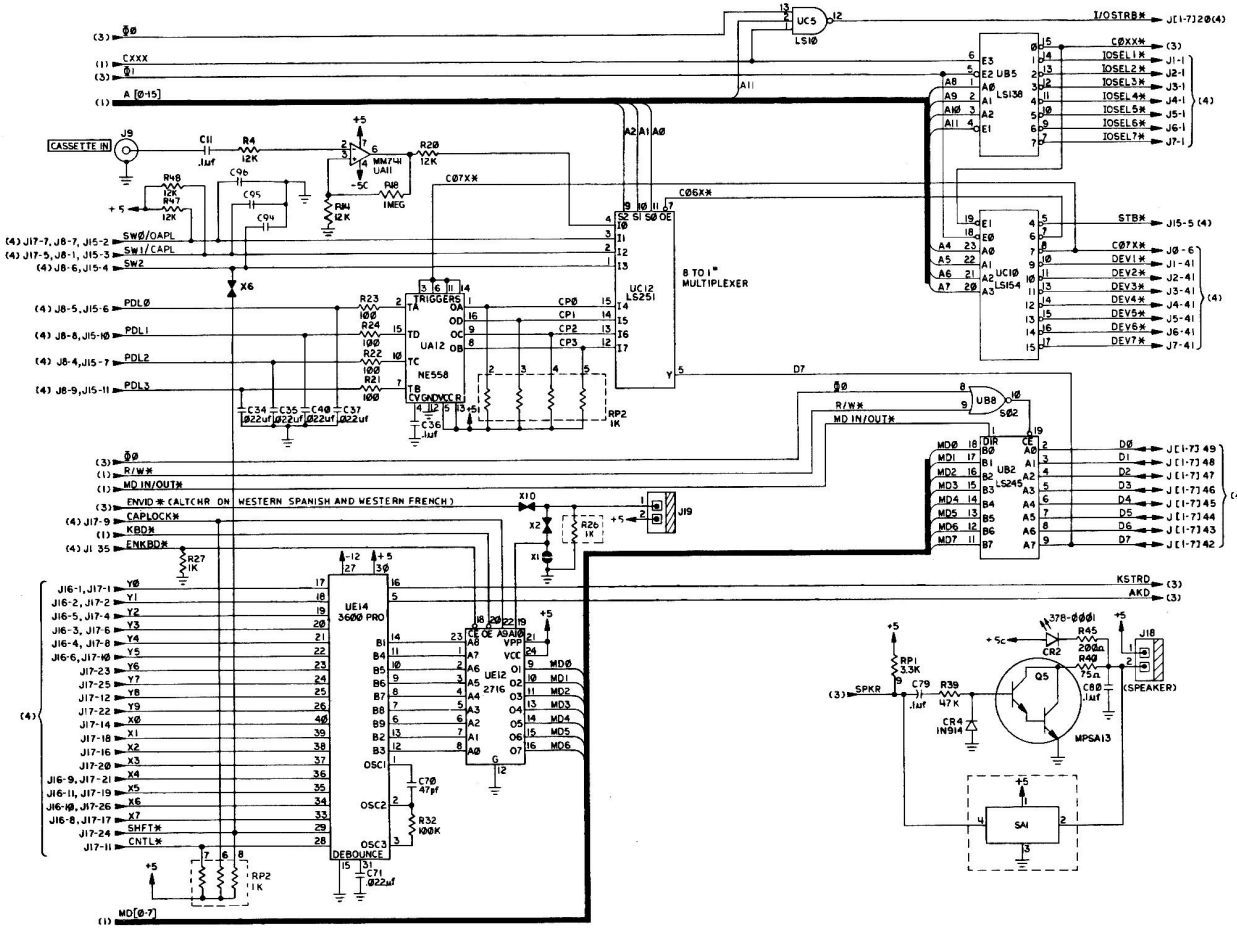

Figure 7-16b
Extended keyboard IIe schematic diagram, part 2

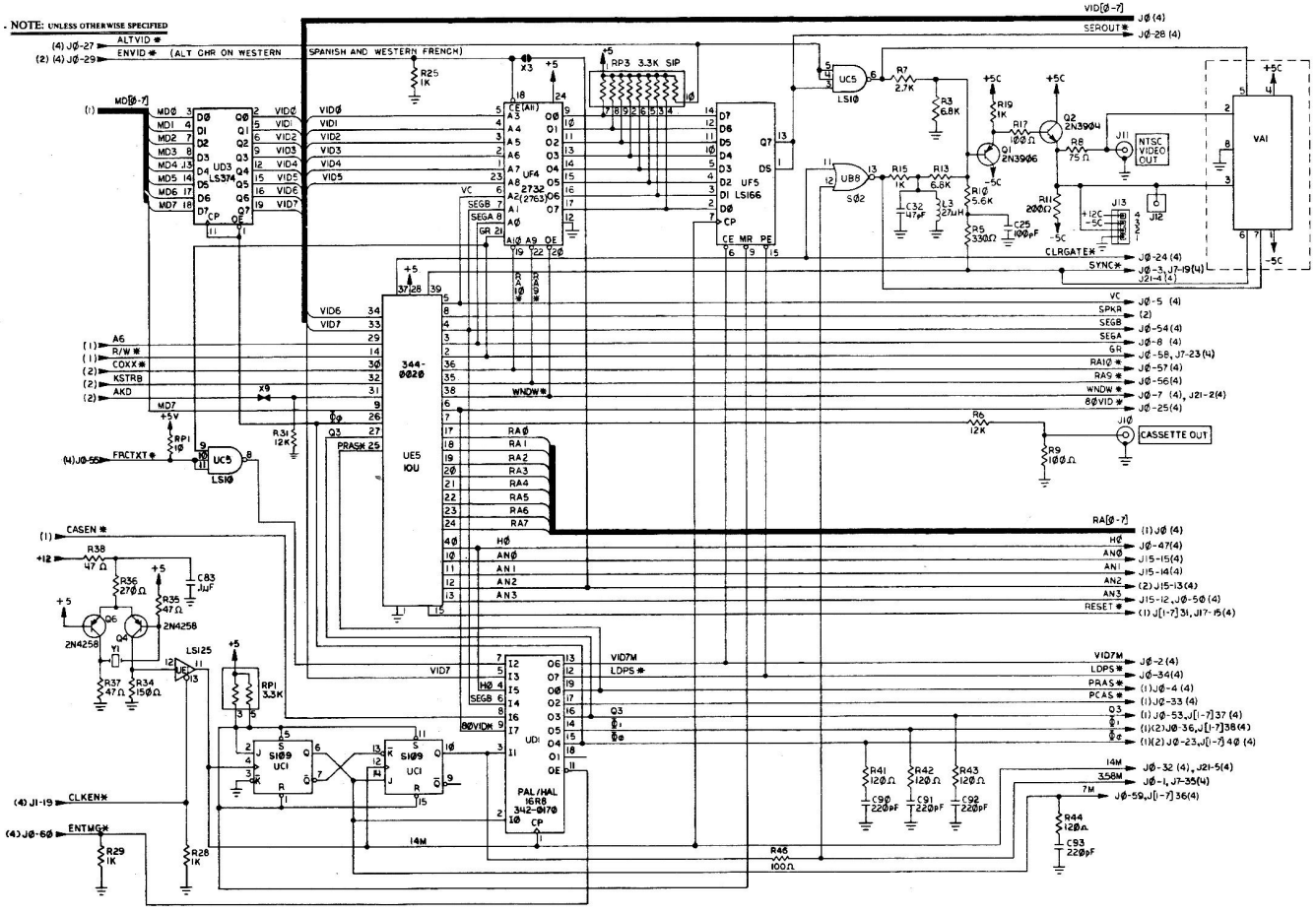

Figure 7-16c
Extended keyboard IIe schematic diagram, part 3

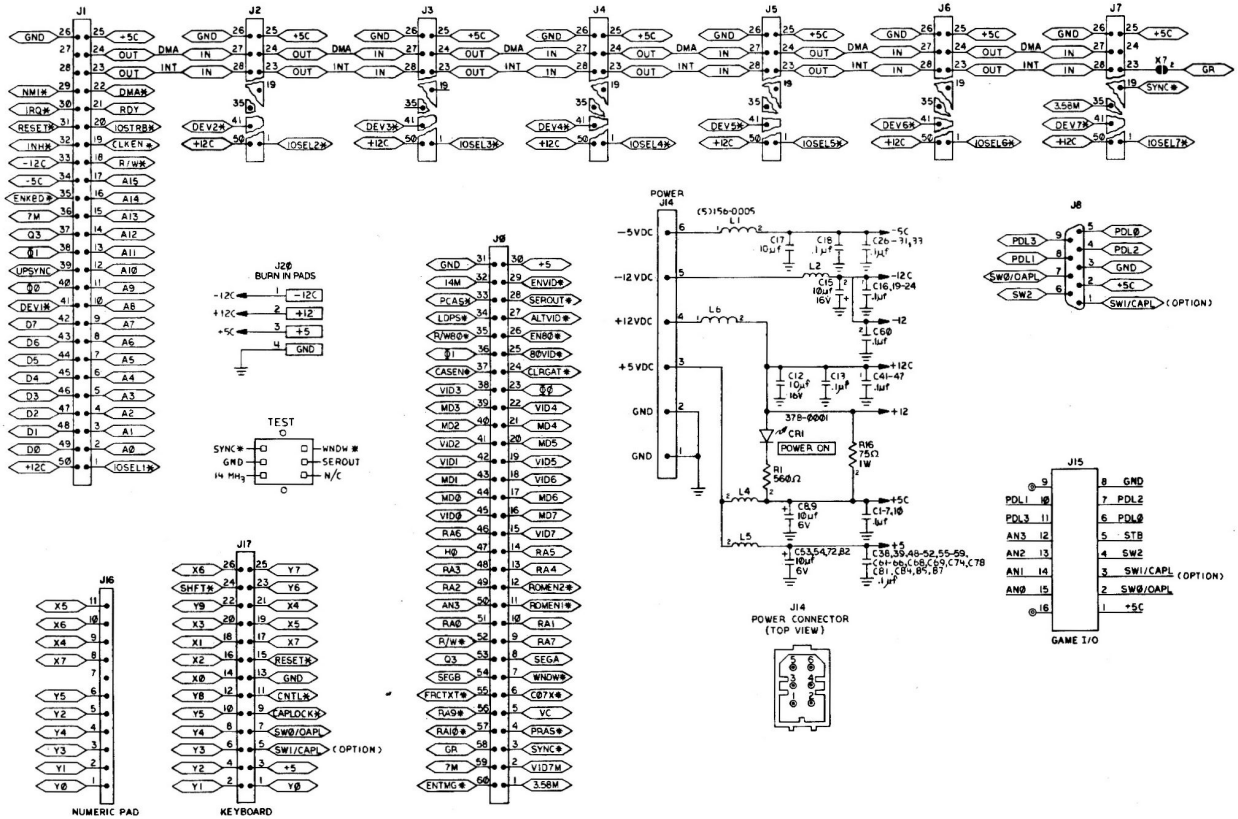

Figure 7-16d
Extended keyboard IIe schematic diagram, part 4

Appendix A

The 65C02 Microprocessor

This appendix contains a description of the differences between the 6502 and the 65C02 microprocessors. It also contains the data sheet for the 65C02 microprocessor.

The 6502 microprocessor was used in the original Apple IIe, Apple II Plus, and Apple II. The 65C02 is a 6502 that uses less power and has ten new instructions and two new addressing modes. The 65C02 is used in the enhanced and extended keyboard Apple IIe's, as well as in the Apple IIc.

In the data sheet tables, execution times are specified in number of cycles. One cycle time for the Apple IIe equals 0.978 microseconds, giving a system clock rate of about 1.02 MHz.

❖ *Note:* If you want to write programs that execute on all computers in the Apple II series, use only those 65C02 instructions that are also present on the 6502.

Differences between 6502 and 65C02

The data sheet lists the instructions and addressing modes of the 65C02. This section supplements that information by listing those instructions whose execution times or results differ in the 6502 and the 65C02.

Different cycle times

A few instructions on the 65C02 operate in different numbers of cycles than their 65C02 equivalents. These instructions are listed in Table A-1.

Table A-1
Cycle time differences

Instruction/mode	Opcode	6502 cycles	65C02 cycles
ASL Absolute, X	1E	7	6
DEC Absolute, X	DE	7	6
INC Absolute, X	FE	7	6
JMP (Absolute)	6C	5	6
LSR Absolute, X	5E	7	6
ROL Absolute, X	3E	7	6
ROR Absolute, X	7E	7	6

Different instruction results

It is important to note that the BIT instruction when used in immediate mode (opcode $89) leaves processor status register bits 7 (N) and 6 (V) unchanged on the 65C02. On the 6502, all modes of the BIT instruction have the same effect on the status register: the value of memory bit 7 is placed in status bit 7, and memory bit 6 is placed in status bit 6.

Also note that if the JMP indirect instruction (code $6C) references an indirect address location that spans a page boundary, the 65C02 fetches the high-order byte of the effective address from the first byte of the next page, while the 6502 fetches it from the first byte of the current page. For example, JMP ($02FF) gets ADL from location $02FF on both processors. But on the 65C02, ADH comes from $0300; on the 6502, ADH comes from $0200.

Data sheet

The remaining pages of this appendix are copyright 1982, NCR Corporation, Dayton, Ohio, and are reprinted with their permission.

NCR65C02

■ GENERAL DESCRIPTION

The NCR CMOS 6502 is an 8-bit microprocessor which is software compatible with the NMOS 6502. The NCR65C02 hardware interfaces with all 6500 peripherals. The enhancements include ten additional instructions, expanded operational codes and two new addressing modes. This microprocessor has all of the advantages of CMOS technology: low power consumption, increased noise immunity and higher reliability. The CMOS 6502 is a low power high performance microprocessor with applications in the consumer, business, automotive and communications market.

■ PIN CONFIGURATION

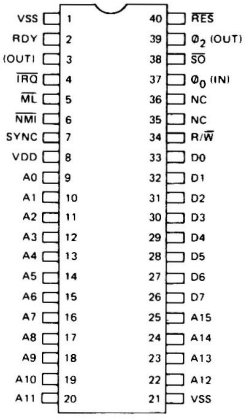

■ FEATURES

- Enhanced software performance including 27 additional OP codes encompassing ten new instructions and two additional addressing modes.
- 66 microprocessor instructions.
- 15 addressing modes.
- 178 operational codes.
- 1MHz, 2MHz operation.
- Operates at frequencies as low as 200 Hz for even lower power consumption (pseudo-static: stop during $\emptyset_2$ high).
- Compatible with NMOS 6500 series microprocessors.
- 64 K-byte addressable memory.
- Interrupt capability.
- Lower power consumption. 4mA @ 1MHz.
- +5 volt power supply.
- 8-bit bidirectional data bus.
- Bus Compatible with M6800.
- Non-maskable interrupt.
- 40 pin dual-in-line packaging.
- 8-bit parallel processing
- Decimal and binary arithmetic.
- Pipeline architecture.
- Programmable stack pointer.
- Variable length stack.
- Optional internal pullups for (RDY, $\overline{IRQ}$, $\overline{SO}$, $\overline{NMI}$ and $\overline{RES}$)

* Specifications are subject to change without notice.

■ NCR65C02 BLOCK DIAGRAM

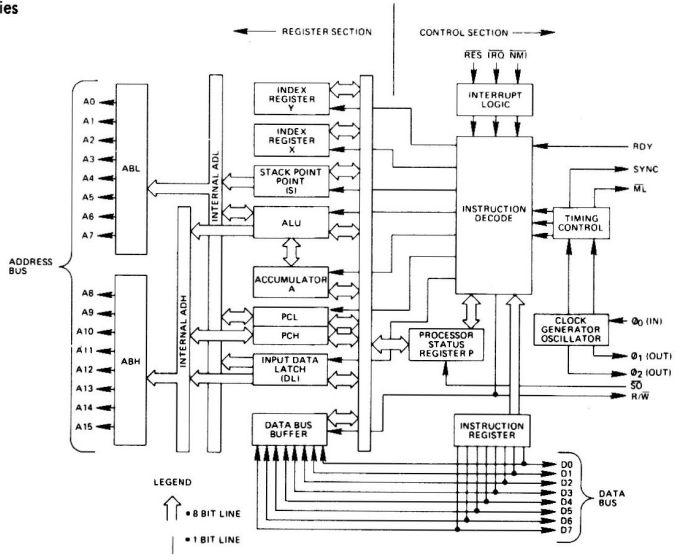

Copyright ©1982 by NCR Corporation, Dayton, Ohio, USA

NCR65C02

■ ABSOLUTE MAXIMUM RATINGS: (V_{DD} = 5.0 V ± 5%, V_{SS} = 0 V, T_A = 0° to + 70°C)

RATING	SYMBOL	VALUE	UNIT
SUPPLY VOLTAGE	V_{DD}	−0.3 to +7.0	V
INPUT VOLTAGE	V_{IN}	−0.3 to +7.0	V
OPERATING TEMP.	T_A	0 to + 70	°C
STORAGE TEMP.	T_{STG}	−55 to + 150	°C

■ PIN FUNCTION

PIN	FUNCTION
A0 - A15	Address Bus
D0 - D7	Data Bus
$\overline{IRQ}$ *	Interrupt Request
RDY *	Ready
$\overline{ML}$	Memory Lock
$\overline{NMI}$ *	Non-Maskable Interrupt
SYNC	Synchronize
$\overline{RES}$ *	Reset
$\overline{SO}$ *	Set Overflow
NC	No Connection
R/$\overline{W}$	Read/Write
VDD	Power Supply (+5V)
VSS	Internal Logic Ground
$\emptyset_0$	Clock Input
$\emptyset_1, \emptyset_2$	Clock Output

*This pin has an optional internal pullup for a No Connect condition.

■ DC CHARACTERISTICS

	SYMBOL	MIN.	TYP.	MAX	UNIT
Input High Voltage					
$\emptyset_0$ (IN)	V_{IH}	V_{SS} + 2.4	–	V_{DD}	V
Input High Voltage					
$\overline{RES}$, $\overline{NMI}$, RDY, $\overline{IRQ}$, Data, S.O.		V_{SS} + 2.0	–	–	V
Input Low Voltage					
$\emptyset_0$ (IN)	V_{IL}	V_{SS} -0.3	–	V_{SS} + 0.4	V
$\overline{RES}$, $\overline{NMI}$, RDY, $\overline{IRQ}$, Data, S.O.		–	–	V_{SS} + 0.8	V
Input Leakage Current					
(V_{IN} = 0 to 5.25V, V_{DD} = 5.25V)	I_{IN}				
With pullups		-30	–	+30	μA
Without pullups		–	–	+1.0	μA
Three State (Off State) Input Current					
(V_{IN} = 0.4 to 2.4V, V_{CC} = 5.25V)					
Data Lines	I_{TSI}	–	–	10	μA
Output High Voltage					
(I_{OH} = −100 μAdc, V_{DD} = 4.75V					
SYNC, Data, A0-A15, R/W)	V_{OH}	V_{SS} + 2.4	–	–	V
Out Low Voltage					
(I_{OL} = 1.6mAdc, V_{DD} = 4.75V					
SYNC, Data, A0-A15, R/W)	V_{OL}	–	–	V_{SS} + 0.4	V
Supply Current f = 1MHz	I_{DD}	–	–	4	mA
Supply Current f = 2MHz	I_{DD}	–	–	8	mA
Capacitance	C				pF
(V_{IN} = 0, T_A = 25°C, f = 1MHz)					
Logic	C_{IN}	–	–	5	
Data		–	–	10	
A0-A15, R/W, SYNC	Cout	–	–	10	
$\emptyset_0$ (IN)	$C\emptyset_0$ (IN)	–	–	10	

NCR65C02

▪ TIMING DIAGRAM

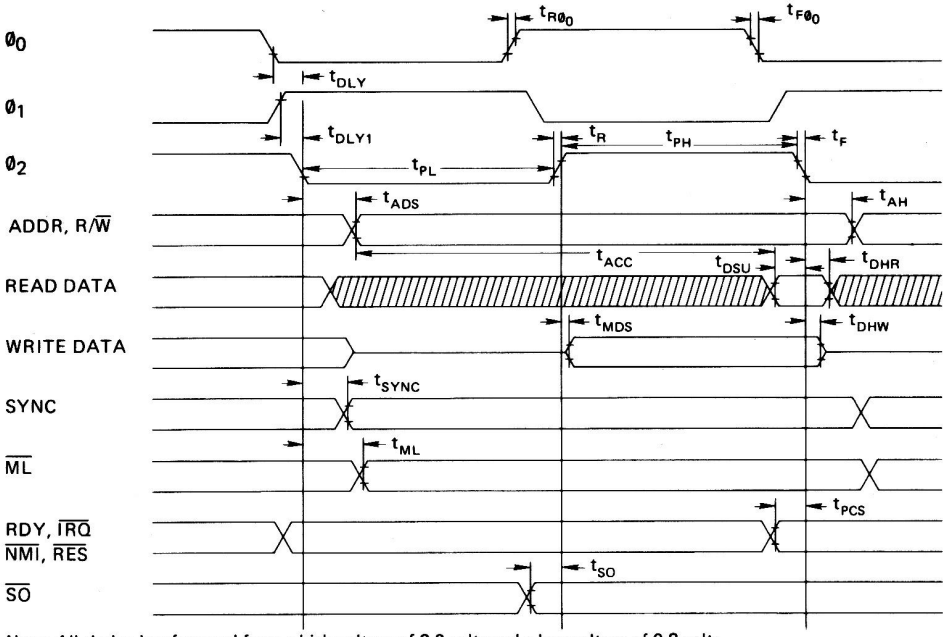

Note: All timing is referenced from a high voltage of 2.0 volts and a low voltage of 0.8 volts.

▪ NEW INSTRUCTION MNEMONICS

HEX	MNEMONIC	DESCRIPTION
80	BRA	Branch relative always [Relative]
3A	DEA	Decrement accumulator [Accum]
1A	INA	Increment accumulator [Accum]
DA	PHX	Push X on stack [Implied]
5A	PHY	Push Y on stack [Implied]
FA	PLX	Pull X from stack [Implied]
7A	PLY	Pull Y from stack [Implied]
9C	STZ	Store zero [Absolute]
9E	STZ	Store zero [ABS, X]
64	STZ	Store zero [Zero page]
74	STZ	Store zero [ZPG,X]
1C	TRB	Test and reset memory bits with accumulator [Absolute]
14	TRB	Test and reset memory bits with accumulator [Zero page]
0C	TSB	Test and set memory bits with accumulator [Absolute]
04	TSB	Test and set memory bits with accumulator [Zero page]

▪ ADDITIONAL INSTRUCTION ADDRESSING MODES

HEX	MNEMONIC	DESCRIPTION
72	ADC	Add memory to accumulator with carry [(ZPG)]
32	AND	"AND" memory with accumulator [(ZPG)]
3C	BIT	Test memory bits with accumulator [ABS, X]
34	BIT	Test memory bits with accumulator [ZPG, X]
D2	CMP	Compare memory and accumulator [(ZPG)]
52	EOR	"Exclusive Or" memory with accumulator [(ZPG)]
7C	JMP	Jump (New addressing mode) [ABS(IND,X)]
B2	LDA	Load accumulator with memory [(ZPG)]
12	ORA	"OR" memory with accumulator [(ZPG)]
F2	SBC	Subtract memory from accumulator with borrow [(ZPG)]
92	STA	Store accumulator in memory [(ZPG)]

■ MICROPROCESSOR PROGRAMMING MODEL

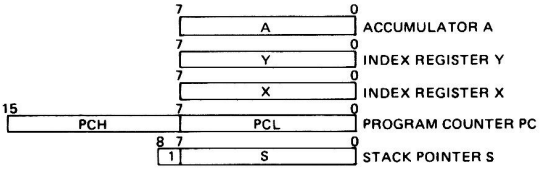

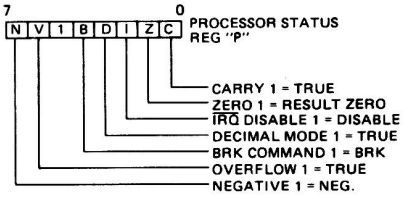

■ FUNCTIONAL DESCRIPTION

Timing Control
The timing control unit keeps track of the instruction cycle being monitored. The unit is set to zero each time an instruction fetch is executed and is advanced at the beginning of each phase one clock pulse for as many cycles as is required to complete the instruction. Each data transfer which takes place between the registers depends upon decoding the contents of both the instruction register and the timing control unit.

Program Counter
The 16-bit program counter provides the addresses which step the microprocessor through sequential instructions in a program.

Each time the microprocessor fetches an instruction from program memory, the lower byte of the program counter (PCL) is placed on the low-order bits of the address bus and the higher byte of the program counter (PCH) is placed on the high-order 8 bits. The counter is incremented each time an instruction or data is fetched from program memory.

Instruction Register and Decode
Instructions fetched from memory are gated onto the internal data bus. These instructions are latched into the instruction register, then decoded, along with timing and interrupt signals, to generate control signals for the various registers.

Arithmetic and Logic Unit (ALU)
All arithmetic and logic operations take place in the ALU including incrementing and decrementing internal registers (except the program counter). The ALU has no internal memory and is used only to perform logical and transient numerical operations.

Accumulator
The accumulator is a general purpose 8-bit register that stores the results of most arithmetic and logic operations, and in addition, the accumulator usually contains one of the two data words used in these operations.

Index Registers
There are two 8-bit index registers (X and Y), which may be used to count program steps or to provide an index value to be used in generating an effective address.

When executing an instruction which specifies indexed addressing, the CPU fetches the op code and the base address, and modifies the address by adding the index register to it prior to performing the desired operation. Pre- or post-indexing of indirect addresses is possible (see addressing modes).

Stack Pointer
The stack pointer is an 8-bit register used to control the addressing of the variable-length stack on page one. The stack pointer is automatically incremented and decremented under control of the microprocessor to perform stack manipulations under direction of either the program or interrupts ($\overline{NMI}$ and $\overline{IRQ}$). The stack allows simple implementation of nested subroutines and multiple level interrupts. The stack pointer should be initialized before any interrupts or stack operations occur.

Processor Status Register
The 8-bit processor status register contains seven status flags. Some of the flags are controlled by the program, others may be controlled both by the program and the CPU. The 6500 instruction set contains a number of conditional branch instructions which are designed to allow testing of these flags (see microprocessor programming model).

■ AC CHARACTERISTICS V_{DD} = 5.0V ± 5%, T_A = 0°C to 70°C, Load = 1 TTL + 130 pF

		1MHz		2MHz		3MHz		
Parameter	Symbol	Min	Max	Min	Max	Min	Max	Unit
Delay Time, $\emptyset_0$ (IN) to $\emptyset_2$ (OUT)	t_{DLY}	–	60	–	60	20	60	nS
Delay Time, $\emptyset_1$ (OUT) to $\emptyset_2$ (OUT)	t_{DLY1}	–20	20	–20	20	–20	20	nS
Cycle Time	t_{CYC}	1.0	5000*	0.50	5000*	0.33	5000*	μS
Clock Pulse Width Low	t_{PL}	460	–	220	–	160	–	nS
Clock Pulse Width High	t_{PH}	460	–	220	–	160	–	nS
Fall Time, Rise Time	t_F, t_R	–	25	–	25	–	25	nS
Address Hold Time	t_{AH}	20	–	20	–	0	–	nS
Address Setup Time	t_{ADS}	–	225	–	140	–	110	nS
Access Time	t_{ACC}	650	–	310	–	170	–	nS
Read Data Hold Time	t_{DHR}	10	–	10	–	10	–	nS
Read Data Setup Time	t_{DSU}	100	–	60	–	60	–	nS
Write Data Delay Time	t_{MDS}	–	30	–	30	–	30	nS
Write Data Hold Time	t_{DHW}	20	–	20	–	15	–	nS
$\overline{SO}$ Setup Time	t_{SO}	100	–	100	–	100	–	nS
Processor Control Setup Time**	t_{PCS}	200	–	150	–	150	–	nS
SYNC Setup Time	t_{SYNC}	–	225	–	140	–	100	nS
$\overline{ML}$ Setup Time	t_{ML}	–	225	–	140	–	100	nS
Input Clock Rise/Fall Time	$t_{F\emptyset o}$, $t_{R\emptyset o}$	–	25	–	25	–	25	nS

*NCR65C02 can be held static with $\emptyset_2$ high.

**This parameter must only be met to guarantee that the signal will be recognized at the current clock cycle.

■ MICROPROCESSOR OPERATIONAL ENHANCEMENTS

Function	NMOS 6502 Microprocessor	NCR65C02 Microprocessor
Indexed addressing across page boundary.	Extra read of invalid address.	Extra read of last instruction byte.
Execution of invalid op codes.	Some terminate only by reset. Results are undefined.	All are NOPs (reserved for future use). Op Code / Bytes / Cycles X2 / 2 / 2 X3, X7, XB, XF / 1 / 1 44 / 2 / 3 54, D4, F4 / 2 / 4 5C / 3 / 8 DC, FC / 3 / 4
Jump indirect, operand = XXFF.	Page address does not increment.	Page address increments and adds one additional cycle.
Read/modify/write instructions at effective address.	One read and two write cycles.	Two read and one write cycle.
Decimal flag.	Indeterminate after reset.	Initialized to binary mode (D=0) after reset and interrupts.
Flags after decimal operation.	Invalid N, V and Z flags.	Valid flag adds one additional cycle.
Interrupt after fetch of BRK instruction.	Interrupt vector is loaded, BRK vector is ignored.	BRK is executed, then interrupt is executed.

■ MICROPROCESSOR HARDWARE ENHANCEMENTS

Function	NMOS 6502	NCR65C02
Assertion of Ready RDY during write operations.	Ignored.	Stops processor during $\emptyset_2$.
Unused input-only pins ($\overline{IRQ}$, $\overline{NMI}$, RDY, $\overline{RES}$, $\overline{SO}$).	Must be connected to low impedance signal to avoid noise problems.	Connected internally by a high-resistance to V_{DD} (approximately 250 K ohm.)

NCR65C02
■ ADDRESSING MODES

Fifteen addressing modes are available to the user of the NCR65C02 microprocessor. The addressing modes are described in the following paragraphs:

Implied Addressing [Implied]
In the implied addressing mode, the address containing the operand is implicitly stated in the operation code of the instruction.

Accumulator Addressing [Accum]
This form of addressing is represented with a one byte instruction and implies an operation on the accumulator.

Immediate Addressing [Immediate]
With immediate addressing, the operand is contained in the second byte of the instruction; no further memory addressing is required.

Absolute Addressing [Absolute]
For absolute addressing, the second byte of the instruction specifies the eight low-order bits of the effective address, while the third byte specifies the eight high-order bits. Therefore, this addressing mode allows access to the total 64K bytes of addressable memory.

Zero Page Addressing [Zero Page]
Zero page addressing allows shorter code and execution times by only fetching the second byte of the instruction and assuming a zero high address byte. The careful use of zero page addressing can result in significant increase in code efficiency.

Absolute Indexed Addressing [ABS, X or ABS, Y]
Absolute indexed addressing is used in conjunction with X or Y index register and is referred to as "Absolute, X," and "Absolute, Y." The effective address is formed by adding the contents of X or Y to the address contained in the second and third bytes of the instruction. This mode allows the index register to contain the index or count value and the instruction to contain the base address. This type of indexing allows any location referencing and the index to modify multiple fields, resulting in reduced coding and execution time.

Zero Page Indexed Addressing [ZPG, X or ZPG, Y]
Zero page absolute addressing is used in conjunction with the index register and is referred to as "Zero Page, X" or "Zero Page, Y." The effective address is calculated by adding the second byte to the contents of the index register. Since this is a form of "Zero Page" addressing, the content of the second byte references a location in page zero. Additionally, due to the "Zero Page" addressing nature of this mode, no carry is added to the high-order eight bits of memory, and crossing of page boundaries does not occur.

Relative Addressing [Relative]
Relative addressing is used only with branch instructions; it establishes a destination for the conditional branch. The second byte of the instruction becomes the operand which is an "Offset" added to the contents of the program counter when the counter is set at the next instruction. The range of the offset is −128 to +127 bytes from the next instruction.

Zero Page Indexed Indirect Addressing [(IND, X)]
With zero page indexed indirect addressing (usually referred to as indirect X) the second byte of the instruction is added to the contents of the X index register; the carry is discarded. The result of this addition points to a memory location on page zero whose contents is the low-order eight bits of the effective address. The next memory location in page zero contains the high-order eight bits of the effective address. Both memory locations specifying the high- and low-order bytes of the effective address must be in page zero.

***Absolute Indexed Indirect Addressing [ABS(IND, X)] (Jump Instruction Only)**
With absolute indexed indirect addressing the contents of the second and third instruction bytes are added to the X register. The result of this addition, points to a memory location containing the lower-order eight bits of the effective address. The next memory location contains the higher-order eight bits of the effective address.

Indirect Indexed Addressing [(IND), Y]
This form of addressing is usually referred to as Indirect, Y. The second byte of the instruction points to a memory location in page zero. The contents of this memory location are added to the contents of the Y index register, the result being the low-order eight bits of the effective address. The carry from this addition is added to the contents of the next page zero memory location, the result being the high-order eight bits of the effective address.

***Zero Page Indirect Addressing [(ZPG)]**
In the zero page indirect addressing mode, the second byte of the instruction points to a memory location on page zero containing the low-order byte of the effective address. The next location on page zero contains the high-order byte of the effective address.

Absolute Indirect Addressing [(ABS)] (Jump Instruction Only)
The second byte of the instruction contains the low-order eight bits of a memory location. The high-order eight bits of that memory location is contained in the third byte of the instruction. The contents of the fully specified memory location is the low-order byte of the effective address. The next memory location contains the high-order byte of the effective address which is loaded into the 16 bit program counter.

NOTE: * = New Address Modes

■ SIGNAL DESCRIPTION

Address Bus (A0-A15)
A0-A15 forms a 16-bit address bus for memory and I/O exchanges on the data bus. The output of each address line is TTL compatible, capable of driving one standard TTL load and 130pF.

Clocks ($\emptyset_0$, $\emptyset_1$, and $\emptyset_2$)
$\emptyset_0$ is a TTL level input that is used to generate the internal clocks in the 6502. Two full level output clocks are generated by the 6502. The $\emptyset_2$ clock output is in phase with $\emptyset_0$. The $\emptyset_1$ output pin is 180° out of phase with $\emptyset_0$. (See timing diagram.)

Data Bus (D0-D7)
The data lines (D0-D7) constitute an 8-bit bidirectional data bus used for data exchanges to and from the device and peripherals. The outputs are three-state buffers capable of driving one TTL load and 130 pF.

Interrupt Request ($\overline{IRQ}$)
This TTL compatible input requests that an interrupt sequence begin within the microprocessor. The $\overline{IRQ}$ is sampled during $\emptyset_2$ operation; if the interrupt flag in the processor status register is zero, the current instruction is completed and the interrupt sequence begins during $\emptyset_1$. The program counter and processor status register are stored in the stack. The microprocessor will then set the interrupt mask flag high so that no further $\overline{IRQ}$s may occur. At the end of this cycle, the program counter low will be loaded from address FFFE, and program counter high from location FFFF, transferring program control to the memory vector located at these addresses. The RDY signal must be in the high state for any interrupt to be recognized. A 3K ohm external resistor should be used for proper wire OR operation.

Memory Lock ($\overline{ML}$)
In a multiprocessor system, the $\overline{ML}$ output indicates the need to defer the rearbitration of the next bus cycle to ensure the integrity of read-modify-write instructions. $\overline{ML}$ goes low during ASL, DEC, INC, LSR, ROL, ROR, TRB, TSB memory referencing instructions. This signal is low for the modify and write cycles.

Non-Maskable Interrupt ($\overline{NMI}$)
A negative-going edge on this input requests that a non-maskable interrupt sequence be generated within the microprocessor. The $\overline{NMI}$ is sampled during $\emptyset_2$; the current instruction is completed and the interrupt sequence begins during $\emptyset_1$. The program counter is loaded with the interrupt vector from locations FFFA (low byte) and FFFB (high byte), thereby transferring program control to the non-maskable interrupt routine.

Note: Since this interrupt is non-maskable, another $\overline{NMI}$ can occur before the first is finished. Care should be taken when using $\overline{NMI}$ to avoid this.

Ready (RDY)
This input allows the user to single-cycle the microprocessor on all cycles including write cycles. A negative transition to the low state, during or coincident with phase one ($\emptyset_1$), will halt the microprocessor with the output address lines reflecting the current address being fetched. This condition will remain through a subsequent phase two ($\emptyset_2$) in which the ready signal is low. This feature allows microprocessor interfacing with low-speed memory as well as direct memory access (DMA).

Reset ($\overline{RES}$)
This input is used to reset the microprocessor. Reset must be held low for at least two clock cycles after V_{DD} reaches operating voltage from a power down. A positive transistion on this pin will then cause an initialization sequence to begin. Likewise, after the system has been operating, a low on this line of at least two cycles will cease microprocessing activity, followed by initialization after the positive edge on $\overline{RES}$.

When a positive edge is detected, there is an initialization sequence lasting six clock cycles. Then the interrupt mask flag is set, the decimal mode is cleared, and the program counter is loaded with the restart vector from locations FFFC (low byte) and FFFD (high byte). This is the start location for program control. This input should be high in normal operation.

Read/Write (R/$\overline{W}$)
This signal is normally in the high state indicating that the microprocessor is reading data from memory or I/O bus. In the low state the data bus has valid data from the microprocessor to be stored at the addressed memory location.

Set Overflow ($\overline{SO}$)
A negative transition on this line sets the overflow bit in the status code register. The signal is sampled on the trailing edge of $\emptyset_1$.

Synchronize (SYNC)
This output line is provided to identify those cycles during which the microprocessor is doing an OP CODE fetch. The SYNC line goes high during $\emptyset_1$ of an OP CODE fetch and stays high for the remainder of that cycle. If the RDY line is pulled low during the $\emptyset_1$ clock pulse in which SYNC went high, the processor will stop in its current state and will remain in the state until the RDY line goes high. In this manner, the SYNC signal can be used to control RDY to cause single instruction execution.

▪ INSTRUCTION SET — ALPHABETICAL SEQUENCE

ADC Add Memory to Accumulator with Carry
AND "AND" Memory with Accumulator
ASL Shift One Bit Left
BCC Branch on Carry Clear
BCS Branch on Carry Set
BEQ Branch on Result Zero
BIT Test Memory Bits with Accumulator
BMI Branch on Result Minus
BNE Branch on Result not Zero
BPL Branch on Result Plus
***BRA** Branch Always
BRK Force Break
BVC Branch on Overflow Clear
BVS Branch on Overflow Set
CLC Clear Carry Flag
CLD Clear Decimal Mode
CLI Clear Interrupt Disable Bit
CLV Clear Overflow Flag
CMP Compare Memory and Accumulator
CPX Compare Memory and Index X
CPY Compare Memory and Index Y
***DEA** Decrement Accumulator
DEC Decrement by One
DEX Decrement Index X by One
DEY Decrement Index Y by One
EOR "Exclusive-or" Memory with Accumulator
***INA** Increment Accumulator
INC Increment by One
INX Increment Index X by One
INY Increment Index Y by One
JMP Jump to New Location
JSR Jump to New Location Saving Return Address
LDA Load Accumulator with Memory
LDX Load Index X with Memory
LDY Load Index Y with Memory
LSR Shift One Bit Right
NOP No Operation
ORA "OR" Memory with Accumulator
PHA Push Accumulator on Stack
PHP Push Processor Status on Stack
***PHX** Push Index X on Stack
***PHY** Push Index Y on Stack
PLA Pull Accumulator from Stack
PLP Pull Processor Status from Stack
***PLX** Pull Index X from Stack
***PLY** Pull Index Y from Stack
ROL Rotate One Bit Left
ROR Rotate One Bit Right
RTI Return from Interrupt
RTS Return from Subroutine
SBC Subtract Memory from Accumulator with Borrow
SEC Set Carry Flag
SED Set Decimal Mode
SEI Set Interrupt Disable Bit
STA Store Accumulator in Memory
STX Store Index X in Memory
STY Store Index Y in Memory
***STZ** Store Zero in Memory
TAX Transfer Accumulator to Index X
TAY Transfer Accumulator to Index Y
***TRB** Test and Reset Memory Bits with Accumulator
***TSB** Test and Set Memory Bits with Accumulator
TSX Transfer Stack Pointer to Index X
TXA Transfer Index X to Accumulator
TXS Transfer Index X to Stack Pointer
TYA Transfer Index Y to Accumulator

Note: * = New Instruction

▪ MICROPROCESSOR OP CODE TABLE

S D	0	1	2	3	4	5	6	7	8	9	A	B	C	D	E	F	
0	BRK	ORA ind, X			TSB* zpg	ORA zpg	ASL zpg		PHP	ORA imm	ASL A		TSB* abs	ORA abs	ASL abs		0
1	BPL rel	ORA ind, Y	ORA*† (zpg)		TRB* zpg	ORA zpg, X	ASL zpg, X		CLC	ORA abs, Y	INA* A		TRB* abs	ORA abs, X	ASL abs, X		1
2	JSR abs	AND ind, X			BIT zpg	AND zpg	ROL zpg		PLP	AND imm	ROL A		BIT abs	AND abs	ROL abs		2
3	BMI rel	AND ind, Y	AND*† (zpg)		BIT* zpg, X	AND zpg, X	ROL zpg, X		SEC	AND abs, Y	DEA* A		BIT*† abs, X	AND abs, X	ROL abs, X		3
4	RTI	EOR ind, X				EOR zpg	LSR zpg		PHA	EOR imm	LSR A		JMP abs	EOR abs	LSR abs		4
5	BVC rel	EOR ind, Y	EOR*† (zpg)			EOR zpg, X	LSR zpg, X		CLI	EOR abs, Y	PHY*			EOR abs, X	LSR abs, X		5
6	RTS	ADC ind, X			STZ* zpg	ADC zpg	ROR zpg		PLA	ADC imm	ROR A		JMP (abs)	ADC abs	ROR abs		6
7	BVS rel	ADC ind, Y	ADC*† (zpg)		STZ* zpg, X	ADC zpg, X	ROR zpg, X		SEI	ADC abs, Y	PLY*		JMP*† abs (ind, X)	ADC abs, X	ROR abs, X		7
8	BRA* rel	STA ind, X			STY zpg	STA zpg	STX zpg		DEY	BIT* imm	TXA		STY abs	STA abs	STX abs		8
9	BCC rel	STA ind, Y	STA*† (zpg)		STY zpg, X	STA zpg, X	STX zpg, Y		TYA	STA abs, Y	TXS		STZ* abs	STA abs, X	STZ* abs, X		9
A	LDY imm	LDA ind, X	LDX imm		LDY zpg	LDA zpg	LDX zpg		TAY	LDA imm	TAX		LDY abs	LDA abs	LDX abs		A
B	BCS rel	LDA ind, Y	LDA*† (zpg)		LDY zpg, X	LDA zpg, X	LDX zpg, Y		CLV	LDA abs, Y	TSX		LDY abs, X	LDA abs, X	LDX abs, Y		B
C	CPY imm	CMP ind, X			CPY zpg	CMP zpg	DEC zpg		INY	CMP imm	DEX		CPY abs	CMP abs	DEC abs		C
D	BNE rel	CMP ind, Y	CMP*† (zpg)			CMP zpg, X	DEC zpg, X		CLD	CMP abs, Y	PHX*			CMP abs, X	DEC abs, X		D
E	CPX imm	SBC ind, X			CPX zpg	SBC zpg	INC zpg		INX	SBC imm	NOP		CPX abs	SBC abs	INC abs		E
F	BEQ rel	SBC ind, Y	SBC*† (zpg)			SBC zpg, X	INC zpg, X		SED	SBC abs, Y	PLX*			SBC abs, X	INC abs, X		F
	0	1	2	3	4	5	6	7	8	9	A	B	C	D	E	F	

Note: * = New OP Codes
Note: † = New Address Modes

• OPERATIONAL CODES, EXECUTION TIME, AND MEMORY REQUIREMENTS

			IMME-DIATE			ABSO-LUTE			ZERO PAGE			ACCUM			IM-PLIED			(IND, X)			(IND), Y			ZPG, X			ZPG, Y			ABS, X			ABS, Y			RELA-TIVE			(ABS)			ABS (IND, X)			(ZPG)			PROCESSOR STATUS CODES	
																																															7 6 5 4 3 2 1 0	
MNE	OPERATION		OP	n	#	OP	n	#	OP	n	#	OP	n	#	OP	n	#	OP	n	#	OP	n	#	OP	n	#	OP	n	#	OP	n	#	OP	n	#	OP	n	#	OP	n	#	OP	n	#	OP	n	#	N V . B D I Z C	MNE
ADC	A + M + C → A	(1,3)	69	2	2	6D	4	3	65	3	2							61	6	2	71	5	2	75	4	2				7D	4	3	79	4	3																N V . . . . Z C	ADC
AND	A ∧ M → A	(1)	29	2	2	2D	4	3	25	3	2							21	6	2	31	5	2	35	4	2				3D	4	3	39	4	3																N . . . . . Z .	AND
ASL	C←[7 6 5 4 3 2 1 0]←0	(1)				0E	6	3	06	5	2	0A	2	1										16	6	2				1E	6	3																	N . . . . . Z C	ASL
BCC	Branch if C=0	(2)																																			90	2	2												BCC
BCS	Branch if C=1	(2)																																			B0	2	2												BCS
BEQ	Branch if Z=1	(2)																																			F0	2	2												BEQ
BIT	A ∧ M	(4,5)	89	2	2	2C	4	3	24	3	2													34	4	2				3C	4	3																	M7 M6 . . . . Z .	BIT
BMI	Branch if N=1	(2)																																			30	2	2												BMI
BNE	Branch if Z=0	(2)																																			D0	2	2												BNE
BPL	Branch if N=0	(2)																																			10	2	2												BPL
BRA	Branch Always	(2)																																			80	2	2												BRA
BRK	Break														00	7	1																																	1 . 1 . .	BRK
BVC	Branch if V=0	(2)																																			50	2	2												BVC
BVS	Branch if V=1	(2)																																			70	2	2												BVS
CLC	0 → C														18	2	1																																	0	CLC
CLD	0 → D														D8	2	1																																	0 . .	CLD
CLI	0 → I														58	2	1																																	. . 0 . .	CLI
CLV	0 → V														B8	2	1																																	. 0 . . .	CLV
CMP	A - M	(1)	C9	2	2	CD	4	3	C5	3	2							C1	6	2	D1	5	2	D5	4	2				DD	4	3	D9	4	3																N . . . . Z C	CMP
CPX	X - M		E0	2	2	EC	4	3	E4	3	2																																							N . . . . Z C	CPX
CPY	Y - M		C0	2	2	CC	4	3	C4	3	2																																							N . . . . Z C	CPY
DEA	A - 1 → A											3A	2	1																																			N . . . . Z .	DEA
DEC	M - 1 → M	(1)				CE	6	3	C6	5	2													D6	6	2				DE	6	3																	N . . . . Z .	DEC
DEX	X - 1 → X														CA	2	1																																	N . . . . Z .	DEX
DEY	Y - 1 → Y														88	2	1																																	N . . . . Z .	DEY
EOR	A ⊻ M → A		49	2	2	4D	4	3	45	3	2							41	6	2	51	5	2	55	4	2				5D	4	3	59	4	3																N . . . . Z .	EOR
INA	A + 1 → A											1A	2	1																																			N . . . . Z .	INA
INC	M + 1 → M	(1)				EE	6	3	E6	5	2													F6	6	2				FE	6	3																	N . . . . Z .	INC
INX	X + 1 → X														E8	2	1																																	N . . . . Z .	INX
INY	Y + 1 → Y														C8	2	1																																	N . . . . Z .	INY
JMP	Jump to new loc					4C	3	3																																	6C	6	3	7C	6	3					JMP
JSR	Jump Subroutine					20	6	3																																											JSR
LDA	M → A	(1)	A9	2	2	AD	4	3	A5	3	2							A1	6	2	B1	5	2	B5	4	2				BD	4	3	B9	4	3																N . . . . Z .	LDA
LDX	M → X	(1)	A2	2	2	AE	4	3	A6	3	2																B6	4	2				BE	4	3															N . . . . Z .	LDX
LDY	M → Y	(1)	A0	2	2	AC	4	3	A4	3	2													B4	4	2				BC	4	3																	N . . . . Z .	LDY
LSR	0 → [7 6 5 4 3 2 1 0] → C	(1)				4E	6	3	46	5	2	4A	2	1										56	6	2				5E	6	3																	0 . . . . Z C	LSR
NOP	PC + 1 → PC														EA	2	1																																		NOP
ORA	A ∨ M → A	(1)	09	2	2	0D	4	3	05	3	2							01	6	2	11	5	2	15	4	2				1D	4	3	19	4	3																N . . . . Z .	ORA
PHA	A → Ms S - 1 → S														48	3	1																																		PHA
PHP	P → Ms S - 1 → S														08	3	1																																		PHP
PHX	X → Ms S - 1 → S														DA	3	1																																		PHX
PHY	Y → Ms S - 1 → S														5A	3	1																																		PHY
PLA	S + 1 → S Ms → A														68	4	1																																N . . . . Z .	PLA
PLP	S + 1 → S Ms → P														28	4	1																																N V . 1 D I Z C	PLP
PLX	S + 1 → S Ms → X														FA	4	1																																N . . . . Z .	PLX
PLY	S + 1 → S Ms → Y														7A	4	1																																N . . . . Z .	PLY
ROL	C←[7 6 5 4 3 2 1 0]←C	(1)				2E	6	3	26	5	2	2A	2	1										36	6	2				3E	6	3																	N . . . . Z C	ROL
ROR	C→[7 6 5 4 3 2 1 0]→C	(1)				6E	6	3	66	5	2	6A	2	1										76	6	2				7E	6	3																	N . . . . Z C	ROR
RTI	Return from Inter.														40	6	1																																N V . 1 D I Z C	RTI
RTS	Return from Subr.														60	6	1																																		RTS
SBC	A - M - C̄ → A	(1,3)	E9	2	2	ED	4	3	E5	3	2							E1	6	2	F1	5	2	F5	4	2				FD	4	3	F9	4	3																N V . . . . Z C	SBC
SEC	1 → C														38	2	1																																		1	SEC
SED	1 → D														F8	2	1																																	. 1 . . .	SED
SEI	1 → I														78	2	1																																	. . . 1 . .	SEI
STA	A → M					8D	4	3	85	3	2							81	6	2	91	6	2	95	4	2				9D	5	3	99	5	3																		STA
STX	X → M					8E	4	3	86	3	2																96	4	2																						STX
STY	Y → M					8C	4	3	84	3	2													94	4	2																										STY
STZ	00 → M					9C	4	3	64	3	2													74	4	2				9E	5	3																		STZ
TAX	A → X														AA	2	1																																N . . . . Z .	TAX
TAY	A → Y														A8	2	1																																N . . . . Z .	TAY
TRB	Ā ∧ M → M	(4)				1C	6	3	14	5	2																																							. . . . Z .	TRB
TSB	A ∨ M → M	(4)				0C	6	3	04	5	2																																							. . . . Z .	TSB
TSX	S → X														BA	2	1																																N . . . . Z .	TSX
TXA	X → A														8A	2	1																																N . . . . Z .	TXA
TXS	X → S														9A	2	1																																		TXS
TYA	Y → A														98	2	1																																N . . . . Z .	TYA

Notes:

1. Add 1 to "n" if page boundary is crossed.
2. Add 1 to "n" if branch occurs to same page.
   Add 2 to "n" if branch occurs to different page.
3. Add 1 to "n" if decimal mode.
4. V bit equals memory bit 6 prior to execution.
   N bit equals memory bit 7 prior to execution.

*5. The immediate addressing mode of the BIT instruction leaves bits 6 & 7 (V & N) in the Processor Status Code Register unchanged.

X Index X
Y Index Y
A Accumulator
M Memory per effective address
Ms Memory per stack pointer

\+ Add
− Subtract
∧ And
∨ Or
⊻ Exclusive or

n No. Cycles
No. Bytes
M6 Memory bit 6
M7 Memory bit 7

Appendix B

Directory of Built-in Subroutines

Here is a list of useful subroutines in the Apple IIe's Monitor. To use these subroutines from machine-language programs, store data into the specified memory locations or microprocessor registers as required by the subroutine and execute a JSR to the subroutine's starting address. After the subroutine performs its function, it returns with the 65C02's registers changed as described.

Warning Do not jump into the middle of Monitor subroutines. Although the starting addresses are the same for all models of the Apple II, the actual code is different.

BASICIN Read the keyboard $C305

When the 80-column firmware is active, BASICIN is used instead of KEYIN. BASICIN operates like KEYIN except that it displays a solid, nonblinking cursor instead of a blinking checkerboard cursor.

BASICOUT Output to screen $C307

When the 80-column firmware is active, BASICOUT is used instead of COUT1. BASICOUT displays the character in the accumulator on the Apple IIe's screen at the current output cursor position and advances the output cursor. It places the character using the setting of the Normal/Inverse location. It handles control codes; see Table 3-3b. BASICOUT returns with all registers intact.

BELL Output a bell character $FF3A

BELL writes a bell (Control-G) character to the current output device. It leaves the accumulator holding $87.

BELL1 Sends a beep to the speaker $FBDD

BELL1 generates a 1-kHz tone in the Apple IIe's speaker for 0.1 second. It scrambles the A and X registers.

CLREOL Clear to end of line $FC9C

CLREOL clears a text line from the cursor position to the right edge of the window. CLREOL destroys the contents of A and Y.

CLEOLZ Clear to end of line $FC9E

CLEOLZ clears a text line to the right edge of the window, starting at the location given by base address BASL, which is indexed by the contents of the Y register. CLEOLZ destroys the contents of A and Y.

CLREOP Clear to end of window $FC42

CLREOP clears the text window from the cursor position to the bottom of the window. CLREOP destroys the contents of A and Y.

CLRSCR Clear the low-resolution screen $F832

CLRSCR clears the low-resolution graphics display to black. If you call CLRSCR while the video display is in text mode, it fills the screen with inverse-mode at-sign (@) characters. CLRSCR destroys the contents of A and Y.

CLRTOP · Clear the low-resolution screen $F836

CLRTOP is the same as CLRSCR (above), except that it clears only the top 40 rows of the low-resolution display.

COUT Output a character $FDED

COUT calls the current character output subroutine. The character to be output should be in the accumulator. COUT calls the subroutine whose address is stored in CSW (locations $36 and $37), which is usually one of the standard character output subroutines, COUT1 or BASICOUT.

COUT1 Output to screen $FDF0

COUT1 displays the character in the accumulator on the Apple IIe's screen at the current output cursor position and advances the output cursor. It places the character using the setting of the Normal/Inverse location. It handles the codes for carriage return, linefeed, backspace, and bell. It returns with all registers intact.

CROUT Generate a carriage return character $FD8E

CROUT sends a carriage return character to the current output device.

CROUT1 Generate carriage return, clear rest of line $FD8B

CROUT1 clears the screen from the current cursor position to the edge of the text window, then calls CROUT.

GETLN Get an input line with prompt $FD6A

GETLN is the standard input subroutine for entire lines of characters, as described in Chapter 3. Your program calls GETLN with the prompt character in location $33; GETLN returns with the input line in the input buffer (beginning at location $0200) and the X register holding the length of the input line.

GETLNZ Get an input line $FD67

GETLNZ is an alternate entry point for GETLN that sends a carriage return to the standard output, then continues into GETLN.

GETLN1 Get an input line, no prompt $FD6F

GETLN1 is an alternate entry point for GETLN that does not issue a prompt before it accepts the input line. If, however, the user cancels the input line, either with too many backspaces or with a Control-X, then GETLN1 will issue the contents of location $33 as a prompt when it gets another line.

HLINE Draw a horizontal line of blocks $F819

HLINE draws a horizontal line of blocks of the color set by SETCOL on the low-resolution graphics display. Call HLINE with the vertical coordinate of the line in the accumulator, the leftmost horizontal coordinate in the Y register, and the rightmost horizontal coordinate in location $2C. HLINE returns with A and Y scrambled X intact.

HOME Home cursor and clear $FC58

HOME clears the display and puts the cursor in the home position: the upper-left corner of the screen.

IOREST Restore all registers $FF3F

IOREST loads the 65C02's internal registers with the contents of memory locations $45 through $49.

IOSAVE Save all registers $FF4A

IOSAVE stores the contents of the 65C02's internal registers in locations $45 through $49 in the order A, X, Y, P, S. The contents of A and X are changed and the decimal mode is cleared.

KEYIN Read the keyboard $FD1B

KEYIN is the keyboard input subroutine. It reads the Apple IIe's keyboard, waits for a keypress, and randomizes the random number seed at $4E–$4F. When a key is pressed, KEYIN removes the blinking cursor from the display and returns with the keycode in the accumulator. KEYIN is described in Chapter 3.

MOVE Move a block of memory $FE2C

MOVE copies the contents of memory from one range of locations to another. This subroutine is the same as the MOVE command in the Monitor, except that it takes its arguments from pairs of locations in memory, low-byte first. The destination address must be in A4 ($42–$43), the starting source address in A1 ($3C–$3D), and the ending source address in A2 ($3E–3F) when your program calls MOVE. Register Y must contain $00 when your program calls MOVE.

NEXTCOL Increment color by 3 $F85F

NEXTCOL adds 3 to the current color (set by SETCOL) used for low-resolution graphics.

PLOT Plot on the low-resolution screen $F800

PLOT puts a single block of the color value set by SETCOL on the low-resolution display screen. The block's vertical position is passed in the accumulator, its horizontal position in the Y register. PLOT returns with the accumulator scrambled, but X and Y intact.

PRBLNK Print three spaces $F948

PRBLNK outputs three blank spaces to the standard output device. On return, the accumulator usually contains $A0, the X register contains 0.

PRBL2 Print many blank spaces $F94A

PRBL2 outputs from 1 to 256 blanks to the standard output device. Upon entry, the X register should contain the number of blanks to be output. If X=$00, then PRBL2 will output 256 blanks.

PRBYTE Print a hexadecimal byte $FDDA

PRBYTE outputs the contents of the accumulator in hexadecimal on the current output device. The contents of the accumulator are scrambled.

PREAD Read a hand control $FB1E

PREAD returns a number that represents the position of a hand control. You pass the number of the hand control in the X register. If this number is not valid (not equal to 0, 1, 2, or 3), strange things may happen. PREAD returns with a number from $00 to $FF in the Y register. The accumulator is scrambled.

PRERR Print ERR $FF2D

PRERR sends the word ERR, followed by a bell character, to the standard output device. On return, the accumulator is scrambled.

PRHEX Print a hexadecimal digit $FDE3

PRHEX prints the lower nibble of the accumulator as a single hexadecimal digit. On return, the contents of the accumulator are scrambled.

PRNTAX Print A and X in hexadecimal $F941

PRNTAX prints the contents of the A and X registers as a four-digit hexadecimal value. The accumulator contains the first byte output, the X register contains the second. On return, the contents of the accumulator are scrambled.

RDCHAR Get an input character or escape code $FD35

RDCHAR is an alternate input subroutine that gets characters from the standard input subroutine, and also interprets the escape codes listed in Chapter 3.

RDKEY Get an input character $FD0C

RDKEY is the character input subroutine. It places a blinking cursor on the display at the cursor position and jumps to the subroutine whose address is stored in KSW (locations $38 and $39), usually the standard input subroutine KEYIN, which returns with a character in the accumulator.

READ Read a record from a cassette $FEFD

READ reads a series of tones at the cassette input port, converts them to data bytes, and stores the data in a specified range of memory locations. Before calling READ, the address of the first byte must be in A1 ($3C–$3D) and the address of the last byte must be in A2 ($3E–$3F).

READ keeps a running exclusive-OR of the data bytes in CHKSUM ($2E). When the last memory location has been filled, READ reads one more byte and compares it with CHKSUM. If they are equal, READ sends out a beep and returns; if not, it sends the word ERR through COUT, sends the beep, and returns.

SCRN Read the low-resolution graphics screen $F871

SCRN returns the color value of a single block on the low-resolution graphics display. Call it with the vertical position of the block in the accumulator and the horizontal position in the Y register. Call it as you would call PLOT (above). The color of the block will be returned in the accumulator. No other registers are changed.

SETCOL Set low-resolution graphics color $F864

SETCOL sets the color used for plotting in low-resolution graphics to the value passed in the accumulator. The colors and their values are listed in Table 2-6.

SETINV Set inverse mode $FE80

SETINV sets the dislay format to inverse. COUT1 will then display all output characters as black dots on a white background. The Y register is set to $3F, all others are unchanged.

SETNORM Set normal mode $FE84

SETNORM sets the display format to normal. COUT1 will then display all output characters as white dots on a black background. On return, the Y register is set to $FF, all others are unchanged.

VERIFY Compare two blocks of memory $FE36

VERIFY compares the contents of one range of memory to another. This subroutine is the same as the VERIFY command in the Monitor, except it takes its arguments from pairs of locations in memory, low-byte first. The destination address must be in A4 ($42–$43), the starting source address in A1 ($3C–$3D), and the ending source address in A2 ($3E–$3F) when your program calls VERIFY.

VLINE Draw a vertical line of blocks $F828

VLINE draws a vertical line of blocks of the color set by SETCOL on the low-resolution display. You should call VLINE with the horizontal coordinate of the line in the Y register, the top vertical coordinate in the accumulator, and the bottom vertical coordinate in location $2D. VLINE will return with the accumulator scrambled.

WAIT Delay $FCA8

WAIT delays for a specific amount of time, then returns to the program that called it. The amount of delay is specified by the contents of the accumulator. The delay is 1/2(26+27A+5A^2) microseconds, where A is the contents of the accumulator. WAIT returns with the accumulator zeroed and the X and Y registers undisturbed.

WRITE Write a record on a cassette $FECD

WRITE converts the data in a range of memory to a series of tones at the cassette output port. Before calling WRITE, the address of the first data byte must be in A1 ($3C–$3D) and the address of the last byte must be in A2 ($3E–$3F). The subroutine writes a ten-second continuous tone as a header, then writes the data followed by a one-byte checksum.

Appendix C

Apple II Family Differences

This appendix lists the differences among the Apple II Plus, the original, enhanced, and extended keyboard Apple IIe's, and the Apple IIc.

If you're trying to write software to run on more than one version of the Apple II, this appendix will help you avoid unexpected problems of incompatibility.

The differences are listed here in approximately the order you are likely to encounter them: obvious differences first, technical details later. Each entry in the list includes references to the chapters in this manual where the item is described.

Keyboard

The Apple IIe and Apple IIc have a 63-key uppercase and lowercase keyboard. The keyboard includes fully operational Shift and Caps Lock keys. It also includes four directional arrow keys for moving the cursor. Chapter 2 includes a description of the keyboard. The cursor-motion keys are described in Chapter 3.

The extended keyboard IIe keyboard includes an 18-key numeric keypad, for a total of 81 keys.

Apple keys

The keyboards for the original and enhanced Apple IIe's and the Apple IIc have two keys marked with the Apple logo. These keys, called the *Open Apple key* and *Solid Apple key,* are used with the Reset key to select special reset functions. They are connected to the buttons on the hand controls, so they can be used for special functions in programs.

On the extended keyboard IIe, the Solid Apple key is replaced by the *Option key* and the Open Apple key is simply referred to as the *Apple key.*

The Apple II and the Apple II Plus do not have Apple keys.

Character sets

The Apple IIe and Apple IIc can display the full ASCII character set, uppercase and lowercase. For compatibility with older Apple II's, the standard display character set includes flashing uppercase instead of inverse-format lowercase; you can also switch to an alternate character set with inverse lowercase and uppercase but no flashing. Chapter 2 includes a description of the display character sets. Chapter 3 tells you how to switch display formats.

The Apple IIc and the enhanced and extended keyboard Apple IIe include a set of "graphic" text characters, called *MouseText characters,* that replace some of the inverse uppercase characters in the alternate character set of the original Apple IIe. MouseText characters are described in Chapter 2.

80-column display

With the addition of an 80-column text card, the Apple IIe can display 80 columns of text. The 80-column display is completely compatible with both graphics modes—you can even use it in mixed mode. (If you prefer, you can use an old-style 80-column card in an expansion slot instead.) Chapter 2 includes a description of the 80-column display.

The Extended 80-Column Text Card is a standard accessory in the enhanced IIe, and comes installed in the extended keyboard IIe. The Apple IIc has a built-in Extended 80-Column Text Card.

Escape codes and control characters

On the Apple IIe and Apple IIc, the display features mentioned above (and many others not mentioned) can be controlled from the keyboard by escape sequences and from programs by control characters. Chapter 3 includes descriptions of those escape codes and control characters.

Built-in Language Card

The 16K bytes of RAM you add to the Apple II Plus by installing the Language Card is built into the Apple IIe and Apple IIc, giving the Apple IIe a standard memory size of 64K bytes. (The Apple IIc has a built-in Extended 80-Column Text Card as well, giving it a standard memory size of 128K bytes.) In the Apple IIe, this 16K-byte block of memory is called the *bank-switched memory*. It's described in Chapter 4.

Auxiliary memory

By installing the Apple IIe Extended 80-Column Text Card, you can add an alternate 64K bytes of RAM to the Apple IIe. Chapter 4 tells you how to use the additional memory. (The Extended 80-Column Text Card also provides the 80-column display option.)

The Extended 80-Column Text Card is a standard accessory in the enhanced IIe, and comes installed in the extended keyboard IIe.

The Apple IIc has a built-in Extended 80-Column Text Card.

Auxiliary slot

In addition to the expansion slots on the Apple II Plus, the Apple IIe has a special slot that is used either for the 80-Column Text Card or for the Extended 80-Column Text Card. This slot is identified in Chapter 1 and described in Chapter 7.

The Apple IIc has the functions of the auxiliary slot built in.

Back panel and connectors

The Apple IIe has a metal back panel with space for several D-type connectors. Each peripheral card you add comes with a connector that you install in the back panel. Chapter 1 includes a description of the back panel; for details, see the installation instructions supplied with the peripheral cards.

The Apple IIc back panel has seven built-in connectors.

Soft switches

The display and memory features of the Apple IIe and the Apple IIc are controlled by soft switches like the ones on the Apple II Plus. On the Apple IIe and the Apple IIc, programs can also read the settings of the soft switches. Chapter 2 describes the soft switches that control the display features, and Chapter 4 describes the soft switches that control the memory features.

Built-in self-test

The Apple IIe has built-in firmware that includes a self-test routine. The self-test is intended primarily for testing during manufacturing, but you can run it to be sure the Apple IIe is working correctly. The self-test is described in Chapter 4.

The Apple IIc also has built-in diagnostics.

Forced reset

Some programs on the Apple II Plus take control of the reset function to keep users from stopping the machine and copying the program. The Apple IIe and Apple IIc have a forced reset that writes over the program in memory. By using the forced reset, you can restart the Apple IIe (or Apple IIc) without turning power off and on and causing unnecessary stress on the circuits. The forced reset is described in Chapter 4.

Interrupt handling

Even though most application programs don't use interrupts, the Apple IIe (and Apple IIc) provide for interrupt-driven programs. For example, the 80-column firmware periodically enables interrupts while it is clearing the display (normally a long time to have interrupts locked out). Interrupts are discussed in Chapter 6.

Vertical sync for animators

Programs with animation on the Apple IIe and Apple IIc can stay in step with the display and avoid flickering objects in their displays. Chapter 7 includes a description of the video generation and the vertical sync.

Signature byte

A program can find out whether it's running on an Apple IIe, Apple IIc, Apple III (in emulation mode), or older model Apple II by reading the byte at location $FBB3 in the System Monitor. In the Apple IIe Monitor, this byte's value is $06; in the Autostart Monitor (the standard Monitor on the Apple II Plus), its value is $EA. (If you start up with DOS and switch to Integer BASIC, the Autostart Monitor is active and the value at location $FBB3 is $EA, even on an Apple IIe.) Obviously, there are lots of other locations that have different values in the different versions of the Monitor; location $FBB3 was chosen because it will have the value $06 even in future revisions of the Apple IIe Monitor.

Hardware implementation

The hardware implementation of the Apple IIe is radically different from the Apple II and Apple II Plus. Three of the more important differences are

These features are described in Chapter 7.

- the custom ICs: the IOU and MMU
- the video hardware, which uses ROM to generate both text and graphics
- the peripheral data bus, which is fully buffered

For more information about the Apple IIc, see the *Apple IIc Technical Reference*.

The Apple IIc

- shares some of the custom ICs of the Apple IIe
- has some new ones all its own
- lacks the slots of the Apple IIe, replacing some of them with built-in I/O ports

Appendix D

Operating Systems and Languages

This appendix is an overview of the characteristics of operating systems and languages when run on the Apple IIe. It is not intended to be a full account. For more information, refer to the manuals that are provided with each product.

Operating systems

This section discusses the operating systems that can be used with the Apple IIe.

ProDOS

ProDOS is the preferred disk operating system for the Apple IIe. It supports interrupts, startup from drives other than a Disk II, and all other hardware and firmware features of the Apple IIe.

DOS 3.3

The Apple IIe works with DOS 3.3. The Apple IIe can also access DOS 3.2 disks by using the BASICS disk. However, neither version of DOS takes full advantage of the features of the Apple IIe. DOS support is provided only for the sake of Apple II series compatibility.

Pascal operating system

The Apple II Pascal operating system was developed from the UCSD Pascal system from the University of California at San Diego. While it shares many characteristics of that system, it has been extended by Apple in several areas.

Pascal versions 1.2 and later support interrupts and all the hardware and firmware features of the Apple IIe.

The Apple II Pascal system uses a disk format different from either ProDOS or DOS 3.3.

CP/M

CP/M is an operating system developed by Digital Research that runs on either the Intel 8080 or Zilog Z80 microprocessors. This means that a coprocessor peripheral card, available from several manufacturers for the Apple IIe, is required to run CP/M. Several versions of CP/M from 1.4 through 3.0 and later can be run on an Apple IIe with an appropriate coprocessor card.

Languages

This section discusses special techniques to use, and characteristics to be aware of, when using Apple programming languages with the Apple IIe.

Assembly language

An aid for assembly-language programming is the *ProDOS Assembler Tools* manual (A2W0013).

Programs written in assembly language have the potential of extracting the most speed and efficiency from your Apple IIe, but they also require the most effort on your part.

Applesoft BASIC

The focus of the chapters in this manual is assembly language, and so most addresses and values are given in hexadecimal notation. Appendix E in this manual includes tables to help you convert from hexidecimal to the decimal notation you will need for BASIC.

In BASIC, use a PEEK to read a location (instead of the LDA used in assembly language), and a POKE (instead of STA) to write to a location. If you read a hardware address from a BASIC program, you get a value between 0 and 255. Bit 7 holds a place value of 128, so if a soft switch is on, its value will be equal to or greater than 128; if the switch is off, the value will be less than 128.

Integer BASIC

Integer BASIC is not included in the Apple IIe firmware. If you want to run it on your Apple IIe, you must use DOS 3.3 to load it in to the system. ProDOS does not support Integer BASIC.

Pascal language

The Pascal language works on the Apple IIe under versions 1.1 and later of the Pascal Operating System. However, for best performance, use Pascal 1.2 or a later version.

Fortran

Fortran works under version 1.1 of the Pascal Operating System, which does not detect or use certain Apple IIe features, such as auxiliary memory. Therefore, Fortran does not take advantage of these features.

Appendix E

Conversion Tables

This appendix briefly discusses bits and bytes and what they can represent. It also contains conversion tables for hexadecimal to decimal and negative decimal, for low-resolution display dot patterns, display color values, and a number of eight-bit codes.

These tables are intended for convenient reference. This appendix is not intended as a tutorial for the materials discussed. The brief section introductions are for orientation only.

Bits and bytes

This section discusses the relationships between bit values and their position within a byte. The following are some rules of thumb regarding the 65C02 and 6502:

- A **bit** is a binary digit; it can be either a 0 or a 1.
- A bit can be used to represent any two-way choice. Some choices that a bit can represent in the Apple IIe are listed in Table E-1.

Table E-1
What a bit can represent

Context	Representing	0 =	1 =
Binary number	Place value	0	1 x that power of 2
Logic	Condition	False	True
Any switch	Position	Off	On
Any switch	Position	Clear*	Set
Serial transfer	Beginning	Start	Carrier (no information yet)

Table E-1 (continued)
What a bit can represent

Context	Representing	0 =	1 =
Serial transfer	Data	0 value	1 value
Serial transfer	Parity	SPACE	MARK
Serial transfer	End		Stop bit(s)
Serial transfer	Communication state	BREAK	Carrier
P reg. bit N	Neg. result?	No	Yes
P reg. bit V	Overflow?	No	Yes
P reg. bit B	BRK command?	No	Yes
P reg. bit D	Decimal mode?	No	Yes
P reg. bit I	IRQ interrupts	Enabled	Disabled (masked out)
P reg. bit Z	Zero result?	No	Yes
P reg. bit C	Carry required?	No	Yes

* Sometimes ambiguously termed *reset*

- Bits can also be combined in groups of any size to represent numbers. Most of the commonly used sizes are multiples of four bits.
- Four bits are a **nibble** (sometimes spelled *nybble*).
- One nibble can represent any of 16 values. Each of these values is assigned a number from 0 through 9 and (because our decimal system has only 10 of the 16 digits we need) A through F.
- Eight bits (two nibbles) make a **byte** (Figure E-1 and Table E-2).
- One byte can represent any of 16 x 16 (or 256) values. The value can be specified by exactly two hexadecimal digits.

Table E-2
Values represented by a nibble

Binary	Hex	Dec
0000	$00	0
0001	$01	1
0010	$02	2
0011	$03	3
0100	$04	4
0101	$05	5
0110	$06	6
0111	$07	7
1000	$08	8
1001	$09	9
1010	$0A	10
1011	$0B	11
1100	$0C	12
1101	$0D	13
1110	$0E	14
1111	$0F	15

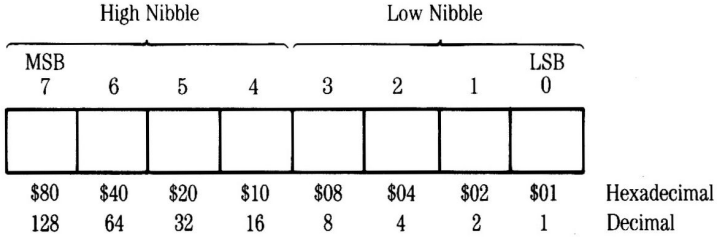

Figure E-1
Bits, nibbles, and bytes

- Bits within a byte are numbered from bit 0 on the right to bit 7 on the left.
- The bit number is the same as the power of two that it represents, in a manner completely analogous to the digits in a decimal number.
- One memory position in the Apple IIe contains one eight-bit byte of data.
- How byte values are interpreted depends on whether the byte is an instruction in a language, part or all of an address, an ASCII code, or some other form of data. Tables E-6 through E-13 list some of the ways bytes are commonly interpreted.
- Two bytes make a **word.** The 16 bits of a word can represent any one of 256 x 256 (or 65,536) different values.
- The 65C02 uses a 16-bit word to represent memory locations. It can therefore distinguish among 65,536 (64K) locations at any given time.
- A memory location is one byte of a 256-byte page. The low-order byte of an address specifies this byte. The high-order byte specifies the memory page the byte is on.

Hexadecimal and decimal

Use Table E-3 for conversion of hexadecimal and decimal numbers.

Table E-3
Hexadecimal/decimal conversion

Digit	$x000	$0x00	$00x0	$000x
F	61440	3840	240	15
E	57344	3584	224	14
D	53248	3328	208	13
C	49152	3072	192	12
B	45056	2816	176	11
A	40960	2560	160	10
9	36864	2304	144	9
8	32768	2048	128	8
7	28672	1792	112	7
6	24576	1536	96	6
5	20480	1280	80	5
4	16384	1024	64	4
3	12288	768	48	3
2	8192	512	32	2
1	4096	256	16	1

To convert a hexadecimal number to a decimal number, find the decimal numbers corresponding to the positions of each hexadecimal digit. Write them down and add them up.

For example:

```
$3C = ?          $FD47 = ?
$30 = 48         $F000 = 61440
$0C = 12         $ D00 =  3328
-------          $  40 =    64
$3C = 60         $   7 =     7
                 ----------
                 $FD47 = 64839
```

To convert a decimal number to hexadecimal, subtract from the decimal number the largest decimal entry in the table that is less than the number. Write down the hexadecimal digit (noting its place value) also. Now subtract the largest decimal number in the table that is less than the decimal remainder, and write down the next hexadecimal digit. Continue until you have zero left. Add up the hexadecimal numbers.

For example:

```
16215 = $ ?
16215 - 12288 = 3927        12288 = $7000
 3927 -  3840 =   87         3840 = $ F00
   87 -    80 =    7           80 = $  50
           7                    7 = $   7
                                  ----------
                                  16215 = $7F57
```

Hexadecimal and negative decimal

If a number is larger than decimal 32,767, Applesoft BASIC allows and Integer BASIC requires that you use the negative-decimal equivalent of the number. Table E-4 is set up to make it easy for you to convert a hexadecimal number directly to a negative decimal number.

Table E-4
Hexadecimal to negative decimal conversion

Digit	$x000	$$0x00	$$00x0	$$000x
F	0	0	0	–1
E	–4096	–256	–16	–2
D	–8192	–512	–32	–3
C	–12288	–768	–48	–4
B	–16384	–1024	–64	–5
A	–20480	–1280	–80	–6
9	–24576	–1536	–96	–7
8	–28672	–1792	–112	–8
7		–2048	–128	–9
6		–2304	–144	–10
5		–2560	–160	–11
4		–2816	–176	–12
3		–3072	–192	–13
2		–3328	–208	–14
1		–3584	–224	–15
0		–3840	–240	–16

To perform this conversion, write down the four decimal numbers corresponding to the four hexadecimal digits (zeros included). Then add their values. The resulting number is the desired negativ decimal number.

For example:

```
$C010 = - ?
$C000:  -12288
$ 000:  - 3840
$  10:  -  224
$   0:  -   16
-------------
$C010   -16368
```

To convert a negative-decimal number to a positive decimal number, add it to 65,536. (This addition ends up looking like subtraction.)

For example:

```
-151 = + ?
65536 + (-151) = 65536 - 151 = 65385
```

To convert a negative-decimal number to a hexadecimal number, first convert it to a positive decimal number, then use Table E-3.

Graphics bits and pieces

Table E-5 is a quick guide to the hexadecimal values corresponding to seven-bit high-resolution patterns on the display screen. Since the bits are displayed in reverse order, it takes some calculation to determine these values. Table E-5 should make it easy.

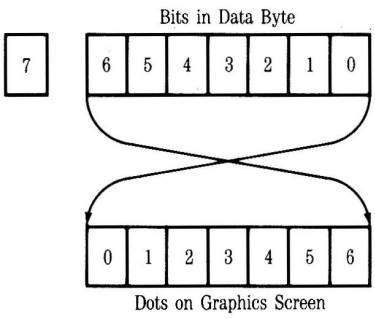

Figure E-2
Bit ordering in graphics displays

Table E-5
Hexadecimal values for high-resolution dot patterns

Bit pattern	x=0	x=1	Bit pattern	x=0	x=1
x0000000	$00	$80	x0100000	$02	$82
x0000001	$40	$C0	x0100001	$42	$C2
x0000010	$20	$A0	x0100010	$22	$A2
x0000011	$60	$E0	x0100011	$62	$E2
x0000100	$10	$90	x0100100	$12	$92
x0000101	$50	$D0	x0100101	$52	$D2
x0000110	$30	$B0	x0100110	$32	$B2
x0000111	$70	$F0	x0100111	$72	$F2
x0001000	$08	$88	x0101000	$0A	$8A
x0001001	$48	$C8	x0101001	$4A	$CA
x0001010	$28	$A8	x0101010	$2A	$AA
x0001011	$68	$E8	x0101011	$6A	$EA
x0001100	$18	$98	x0101100	$1A	$9A
x0001101	$58	$D8	x0101101	$5A	$DA
x0001110	$38	$B8	x0101110	$3A	$BA
x0001111	$78	$F8	x0101111	$7A	$FA
x0010000	$04	$84	x0110000	$06	$86
x0010001	$44	$C4	x0110001	$46	$C6
x0010010	$24	$A4	x0110010	$26	$A6
x0010011	$64	$E4	x0110011	$66	$E6
x0010100	$14	$94	x0110100	$16	$96
x0010101	$54	$D4	x0110101	$56	$D6
x0010110	$34	$B4	x0110110	$36	$B6
x0010111	$74	$F4	x0110111	$76	$F6
x0011000	$0C	$8C	x0111000	$0E	$8E
x0011001	$4C	$CC	x0111001	$4E	$CE
x0011010	$2C	$AC	x0111010	$2E	$AE
x0011011	$6C	$EC	x0111011	$6E	$EE
x0011100	$1C	$9C	x0111100	$1E	$9E
x0011101	$5C	$DC	x0111101	$5E	$DE
x0011110	$3C	$BC	x0111110	$3E	$BE
x0011111	$7C	$FC	x0111111	$7E	$FE

The x represents bit 7. Zeros represent bits that are off; ones, bits that are on. Use the first hexadecimal value if bit 7 is to be off, and the second if it is to be on.

For example, to get bit pattern 00101110, use $3A; for 10101110, use $BA.

Table E-5 (continued)
Hexadecimal values for high-resolution dot patterns

Bit pattern	x=0	x=1	Bit pattern	x=0	x=1
x1000000	$01	$81	x1100000	$03	$83
x1000001	$41	$C1	x1100001	$43	$C3
x1000010	$21	$A1	x1100010	$23	$A3
x1000011	$61	$E1	x1100011	$63	$E3
x1000100	$11	$91	x1100100	$13	$93
x1000101	$51	$D1	x1100101	$53	$D3
x1000110	$31	$B1	x1100110	$33	$B3
x1000111	$71	$F1	x1100111	$73	$F3
x1001000	$09	$89	x1101000	$0B	$8B
x1001001	$49	$C9	x1101001	$4B	$CB
x1001010	$29	$A9	x1101010	$2B	$AB
x1001011	$69	$E9	x1101011	$6B	$EB
x1001100	$19	$99	x1101100	$1B	$9B
x1001101	$59	$D9	x1101101	$5B	$DB
x1001110	$39	$B9	x1101110	$3B	$BB
x1001111	$79	$F9	x1101111	$7B	$FB
x1010000	$05	$85	x1110000	$07	$87
x1010001	$45	$C5	x1110001	$47	$C7
x1010010	$25	$A5	x1110010	$27	$A7
x1010011	$65	$E5	x1110011	$67	$E7
x1010100	$15	$95	x1110100	$17	$97
x1010101	$55	$D5	x1110101	$57	$D7
x1010110	$35	$B5	x1110110	$37	$B7
x1010111	$75	$F5	x1110111	$77	$F7
x1011000	$0D	$8D	x1111000	$0F	$8F
x1011001	$4D	$CD	x1111001	$4F	$CF
x1011010	$2D	$AD	x1111010	$2F	$AF
x1011011	$6D	$ED	x1111011	$6F	$EF
x1011100	$1D	$9D	x1111100	$1F	$9F
x1011101	$5D	$DD	x1111101	$5F	$DF
x1011110	$3D	$BD	x1111110	$3F	$BF
x1011111	$7D	$FD	x1111111	$7F	$FF

Eight-bit code conversions

Tables E-5 through E-12 show the entire ASCII character set twice: once with the high bit off, and once with it on. Here is how to interpret these tables.

- The *Binary* column has the eight-bit code for each ASCII character.
- The first 128 ASCII entries represent seven-bit ASCII codes plus a high-order bit of 0 (SPACE parity or Pascal)—for example, 010010000 for the letter *H.*
- The last 128 ASCII entries (from 128 through 255) represent seven-bit ASCII codes plus a high-order bit of 1 (MARK parity or BASIC)—for example, 11001000 for the letter *H.*
- A transmitted or received ASCII character will take whichever form is appropriate if odd or even parity is selected—for example, 11001000 for an odd-parity H, 01001000 for an even-parity H.
- The *ASCII Char* column gives the ASCII character name.
- The *Interpretation* column spells out the meaning of special symbols and abbreviations, where necessary.
- The *What to Type* column indicates what keystrokes generate the ASCII character (where it is not obvious).

The columns marked *Pri* and *Alt* indicate what displayed character results from each code when using the primary or alternate display character set, respectively. Boldface is used for inverse characters; italic is used for flashing characters.

The MouseText characters are shown in Table E-8.

Note that the values $40 through $5F (and $C0 through $DF) in the alternate character set are displayed as MouseText characters if MouseText is turned on.

❖ *Note:* The primary and alternate displayed character sets in Tables E-6 through E-13 are the result of firmware mapping. The character generator ROM actually contains only one character set. The firmware mapping procedure is described in the section "Inverse and Flashing Text" in Chapter 3.

Table E-6
Control characters, high bit off

Binary	Dec	Hex	ASCII char	Interpretation	What to type	Pri	Alt
0000000	0	$00	NUL	Blank (null)	Control-@	@	@
0000001	1	$01	SOH	Start of header	Control-A	A	A
0000010	2	$02	STX	Start of text	Control-B	B	B
0000011	3	$03	ETX	End of text	Control-C	C	C
0000100	4	$04	EOT	End of transm	Control-D	D	D
0000101	5	$05	ENQ	Enquiry	Control-E	E	E
0000110	6	$06	ACK	Acknowledge	Control-F	F	F
0000111	7	$07	BEL	Bell	Control-G	G	G
0001000	8	$08	BS	Backspace	Control-H or Left Arrow	H	H
0001001	9	$09	HT	Horizontal tab	Control-I or Tab	I	I
0001010	10	$0A	LF	Line feed	Control-J or Down Arrow	J	J
0001011	11	$0B	VT	Vertical tab	Control-K or Up Arrow	K	K
0001100	12	$0C	FF	Form feed	Control-L	L	L
0001101	13	$0D	CR	Carriage return	Control-M or Return	M	M
0001110	14	$0E	SO	Shift out	Control-N	N	N
0001111	15	$0F	SI	Shift in	Control-O	O	O
0010000	16	$10	DLE	Data link escape	Control-P	P	P
0010001	17	$11	DC1	Device control 1	Control-Q	Q	Q
0010010	18	$12	DC2	Device control 2	Control-R	R	R
0010011	19	$13	DC3	Device control 3	Control-S	S	S
0010100	20	$14	DC4	Device control 4	Control-T	T	T
0010101	21	$15	NAK	Neg. acknowledge	Control-U or Right Arrow	U	U
0010110	22	$16	SYN	Synchronization	Control-V	V	V
0010111	23	$17	ETB	End of text blk.	Control-W	W	W
0011000	24	$18	CAN	Cancel	Control-X	X	X
0011001	25	$19	EM	End of medium	Control-Y	Y	Y
0011010	26	$1A	SUB	Substitute	Control-Z	Z	Z
0011011	27	$1B	ESC	Escape	Control-[or Escape	[	[
0011100	28	$1C	FS	File separator	Control-\	\	\
0011101	29	$1D	GS	Group separator	Control-]	]	]
0011110	30	$1E	RS	Record separator	Control-^	^	^
0011111	31	$1F	US	Unit separator	Control-_	_	_

Table E-7
Special characters, high bit off

Binary	Dec	Hex	ASCII char	Interpretation	What to type	Pri	Alt
0100000	32	$20	SP	Space	Space bar		
0100001	33	$21	!			!	!
0100010	34	$22	"			"	"
0100011	35	$23	#			#	#
0100100	36	$24	$			$	$
0100101	37	$25	%			%	%
0100110	38	$26	&			&	&
0100111	39	$27	'	Apostrophe		'	'
0101000	40	$28	(			(	(
0101001	41	$29	)			)	)
0101010	42	$2A	*			*	*
0101011	43	$2B	+			+	+
0101100	44	$2C	,	Comma		,	,
0101101	45	$2D	-	Hyphen		-	-
0101110	46	$2E	.	Period		.	.
0101111	47	$2F	/			/	/
0110000	48	$30	0			0	0
0110001	49	$31	1			1	1
0110010	50	$32	2			2	2
0110011	51	$33	3			3	3
0110100	52	$34	4			4	4
0110101	53	$35	5			5	5
0110110	54	$36	6			6	6
0110111	55	$37	7			7	7
0111000	56	$38	8			8	8
0111001	57	$39	9			9	9
0111010	58	$3A	:			:	:
0111011	59	$3B	;			;	;
0111100	60	$3C	<			<	<
0111101	61	$3D	=			=	=
0111110	62	$3E	>			>	>
0111111	63	$3F	?			?	?

Table E-8
Uppercase characters, high bit off

Binary	Dec	Hex	ASCII char	Interpretation	What to type	Pri	Alt
1000000	64	$40	@			*@*	
1000001	65	$41	A			*A*	
1000010	66	$42	B			*B*	
1000011	67	$43	C			*C*	
1000100	68	$44	D			*D*	
1000101	69	$45	E			*E*	
1000110	70	$46	F			*F*	
1000111	71	$47	G			*G*	
1001000	72	$48	H			*H*	
1001001	73	$49	I			*I*	
1001010	74	$4A	J			*J*	
1001011	75	$4B	K			*K*	
1001100	76	$4C	L			*L*	
1001101	77	$4D	M			*M*	
1001110	78	$4E	N			*N*	
1001111	79	$4F	O			*O*	
1010000	80	$50	P			*P*	
1010001	81	$51	Q			*Q*	
1010010	82	$52	R			*R*	
1010011	83	$53	S			*S*	
1010100	84	$54	T			*T*	
1010101	85	$55	U			*U*	
1010110	86	$56	V			*V*	
1010111	87	$57	W			*W*	
1011000	88	$58	X			*X*	
1011001	89	$59	Y			*Y*	
1011010	90	$5A	Z			*Z*	
1011011	91	$5B	[	Opening bracket		*[*	
1011100	92	$5C	\	Reverse slant		\	
1011101	93	$5D	]	Closing bracket		*]*	
1011110	94	$5E	^	Caret		^	
1011111	95	$5F	_	Underline		_	

Table E-9
Lowercase characters, high bit off

Binary	Dec	Hex	ASCII char	Interpretation	What to type	Pri	Alt
1100000	96	$60	`	Grave accent			`
1100001	97	$61	a			*!*	**a**
1100010	98	$62	b			*"*	**b**
1100011	99	$63	c			*#*	**c**
1100100	100	$64	d			*$*	**d**
1100101	101	$65	e			*%*	**e**
1100110	102	$66	f			*&*	**f**
1100111	103	$67	g			*'*	**g**
1101000	104	$68	h			*(*	**h**
1101001	105	$69	i			*)*	**i**
1101010	106	$6A	j			*	**j**
1101011	107	$6B	k			+	**k**
1101100	108	$6C	l			,	**l**
1101101	109	$6D	m			-	**m**
1101110	110	$6E	n			.	**n**
1101111	111	$6F	o			*/*	**o**
1110000	112	$70	p			*0*	**p**
1110001	113	$71	q			*1*	**q**
1110010	114	$72	r			*2*	**r**
1110011	115	$73	s			*3*	**s**
1110100	116	$74	t			*4*	**t**
1110101	117	$75	u			*5*	**u**
1110110	118	$76	v			*6*	**v**
1110111	119	$77	w			*7*	**w**
1111000	120	$78	x			*8*	**x**
1111001	121	$79	y			*9*	**y**
1111010	122	$7A	z			*:*	**z**
1111011	123	$7B	{	Opening brace		*;*	**{**
1111100	124	$7C	|	Vertical line		<	**|**
1111101	125	$7D	}	Closing brace		=	**}**
1111110	126	$7E	\^	Overline (tilde)		>	**~**
1111111	127	$7F	DEL	Delete/rubout		*?*	**DEL**

Table E-10
Control characters, high bit on

Binary	Dec	Hex	ASCII char	Interpretation	What to type	Pri	Alt
10000000	128	$80	NUL	Blank (null)	Control-@	@	@
10000001	129	$81	SOH	Start of header	Control-A	A	A
10000010	130	$82	STX	Start of text	Control-B	B	B
10000011	131	$83	ETX	End of text	Control-C	C	C
10000100	132	$84	EOT	End of transm.	Control-D	D	D
10000101	133	$85	ENQ	Enquiry	Control-E	E	E
10000110	134	$86	ACK	Acknowledge	Control-F	F	F
10000111	135	$87	BEL	Bell	Control-G	G	G
10001000	136	$88	BS	Backspace	Control-H or Left Arrow	H	H
10001001	137	$89	HT	Horizontal tab	Control-I or Tab	I	I
10001010	138	$8A	LF	Line feed	Control-J or Down Arrow	J	J
10001011	139	$8B	VT	Vertical tab	Control-K or Up Arrow	K	K
10001100	140	$8C	FF	Form feed	Control-L	L	L
10001101	141	$8D	CR	Carriage return	Control-M or Return	M	M
10001110	142	$8E	SO	Shift out	Control-N	N	N
10001111	143	$8F	SI	Shift in	Control-O	O	O
10010000	144	$90	DLE	Data link escape	Control-P	P	P
10010001	145	$91	DC1	Device control 1	Control-Q	Q	Q
10010010	146	$92	DC2	Device control 2	Control-R	R	R
10010011	147	$93	DC3	Device control 3	Control-S	S	S
10010100	148	$94	DC4	Device control 4	Control-T	T	T
10010101	149	$95	NAK	Neg. acknowledge	Control-U or Right Arrow	U	U
10010110	150	$96	SYN	Synchronization	Control-V	V	V
10010111	151	$97	ETB	End of text blk.	Control-W	W	W
10011000	152	$98	CAN	Cancel	Control-X	X	X
10011001	153	$99	EM	End of medium	Control-Y	Y	Y
10011010	154	$9A	SUB	Substitute	Control-Z	Z	Z
10011011	155	$9B	ESC	Escape	Control-[or Escape	[	[
10011100	156	$9C	FS	File separator	Control-\	\	\
10011101	157	$9D	GS	Group separator	Control-]	]	]
10011110	158	$9E	RS	Record separator	Control-^	^	^
10011111	159	$9F	US	Unit separator	Control-_	_	_

Table E-11
Special characters, high bit on

Binary	Dec	Hex	ASCII char	Interpretation	What to type	Pri	Alt
10100000	160	$A0	SP	Space	Space bar		
10100001	161	$A1	!			!	!
10100010	162	$A2	"			"	"
10100011	163	$A3	#			#	#
10100100	164	$A4	$			$	$
10100101	165	$A5	%			%	%
10100110	166	$A6	&			&	&
10100111	167	$A7	'	Apostrophe		'	'
10101000	168	$A8	(			(	(
10101001	169	$A9	)			)	)
10101010	170	$AA	*			*	*
10101011	171	$AB	+			+	+
10101100	172	$AC	,	Comma		,	,
10101101	173	$AD	-	Hyphen		-	-
10101110	174	$AE	.	Period		.	.
10101111	175	$AF	/			/	/
10110000	176	$B0	0			0	0
10110001	177	$B1	1			1	1
10110010	178	$B2	2			2	2
10110011	179	$B3	3			3	3
10110100	180	$B4	4			4	4
10110101	181	$B5	5			5	5
10110110	182	$B6	6			6	6
10110111	183	$B7	7			7	7
10111000	184	$B8	8			8	8
10111001	185	$B9	9			9	9
10111010	186	$BA	:			:	:
10111011	187	$BB	;			;	;
10111100	188	$BC	<			<	<
10111101	189	$BD	=			=	=
10111110	190	$BE	>			>	>
10111111	191	$BF	?			?	?

Table E-12
Uppercase characters, high bit on

Binary	Dec	Hex	ASCII char	Interpretation	What to type	Pri	Alt
11000000	192	$C0	@			@	@
11000001	193	$C1	A			A	A
11000010	194	$C2	B			B	B
11000011	195	$C3	C			C	C
11000100	196	$C4	D			D	D
11000101	197	$C5	E			E	E
11000110	198	$C6	F			F	F
11000111	199	$C7	G			G	G
11001000	200	$C8	H			H	H
11001001	201	$C9	I			I	I
11001010	202	$CA	J			J	J
11001011	203	$CB	K			K	K
11001100	204	$CC	L			L	L
11001101	205	$CD	M			M	M
11001110	206	$CE	N			N	N
11001111	207	$CF	O			O	O
11010000	208	$D0	P			P	P
11010001	209	$D1	Q			Q	Q
11010010	210	$D2	R			R	R
11010011	211	$D3	S			S	S
11010100	212	$D4	T			T	T
11010101	213	$D5	U			U	U
11010110	214	$D6	V			V	V
11010111	215	$D7	W			W	W
11011000	216	$D8	X			X	X
11011001	217	$D9	Y			Y	Y
11011010	218	$DA	Z			Z	Z
11011011	219	$DB	[	Opening bracket		[	[
11011100	220	$DC	\	Reverse slant		\	\
11011101	221	$DD	]	Closing bracket		]	]
11011110	222	$DE	^	Caret		^	^
11011111	223	$DF	_	Underline		_	_

Table E-13
Lowercase characters, high bit on

Binary	Dec	Hex	ASCII char	Interpretation	What to type	Pri	Alt
11100000	224	$E0	`	Grave accent		`	`
11100001	225	$E1	a			a	a
11100010	226	$E2	b			b	b
11100011	227	$E3	c			c	c
11100100	228	$E4	d			d	d
11100101	229	$E5	e			e	e
11100110	230	$E6	f			f	f
11100111	231	$E7	g			g	g
11101000	232	$E8	h			h	h
11101001	233	$E9	i			i	i
11101010	234	$EA	j			j	j
11101011	235	$EB	k			k	k
11101100	236	$EC	l			l	l
11101101	237	$ED	m			m	m
11101110	238	$EE	n			n	n
11101111	239	$EF	o			o	o
11110000	240	$F0	p			p	p
11110001	241	$F1	q			q	q
11110010	242	$F2	r			r	r
11110011	243	$F3	s			s	s
11110100	244	$F4	t			t	t
11110101	245	$F5	u			u	u
11110110	246	$F6	v			v	v
11110111	247	$F7	w			w	w
11111000	248	$F8	x			x	x
11111001	249	$F9	y			y	y
11111010	250	$FA	z			z	z
11111011	251	$FB	{	Opening brace		{	{
11111100	252	$FC	|	Vertical line		|	|
11111101	253	$FD	}	Closing brace		}	}
11111110	254	$FE	~	Overline (tilde)		~	~
11111111	255	$FF	DEL	Delete/rubout	DELETE	DEL	DEL

Appendix F

Frequently Used Tables

This appendix contains copies of the tables you will need to refer to frequently; for example, ASCII codes and soft-switch location. The original table number is given in a footnote to the table.

Table F-1*
Keys and ASCII codes

	Normal		Control		Shift		Both	
Key	**Code**	**Char**	**Code**	**Char**	**Code**	**Char**	**Code**	**Char**
Delete	7F	DEL	7F	DEL	7F	DEL	7F	DEL
Left Arrow	08	BS	08	BS	08	BS	08	BS
Tab	09	HT	09	HT	09	HT	09	HT
Down Arrow	0A	LF	0A	LF	0A	LF	0A	LF
Up Arrow	0B	VT	0B	VT	0B	VT	0B	VT
Return	0D	CR	0D	CR	0D	CR	0D	CR
Right Arrow	15	NAK	15	NAK	15	NAK	15	NAK
Escape	1B	ESC	1B	ESC	1B	ESC	1B	ESC
Space	20	SP	20	SP	20	SP	20	SP
' "	27	'	27	'	22	"	22	"
, <	2C	,	2C	,	3C	<	3C	<
- _	2D	-	1F	US	5F	_	1F	US
. >	2E	.	2E	.	3E	>	3E	>
/ ?	2F	/	2F	/	3F	?	3F	?
0)	30	0	30	0	29	)	29	)
1 !	31	1	31	1	21	!	21	!
2 @	32	2	00	NUL	40	@	00	NUL
3 #	33	3	33	3	23	#	23	#
4 $	34	4	34	4	24	$	24	$

Table F-1 (continued)*
Keys and ASCII codes

	Normal		Control		Shift		Both	
Key	**Code**	**Char**	**Code**	**Char**	**Code**	**Char**	**Code**	**Char**
5 %	35	5	35	5	25	%	25	%
6 ^	36	6	1E	RS	5E	^	1E	RS
7 &	37	7	37	7	26	&	26	&
8 *	38	8	38	8	2A	*	2A	*
9 (	39	9	39	9	28	(	28	(
; :	3B	;	3B	;	3A	:	3A	:
= +	3D	=	3D	=	2B	+	2B	+
[{	5B	[	1B	ESC	7B	{	1B	ESC
\ |	5C	\	1C	FS	7C	|	1C	FS
] }	5D	]	1D	GS	7D	}	1D	GS
` ~	60	`	60	`	7E	~	7E	~
A	61	a	01	SOH	41	A	01	SOH
B	62	b	02	STX	42	B	02	STX
C	63	c	03	ETX	43	C	03	ETX
D	64	d	04	EOT	44	D	04	EOT
E	65	e	05	ENQ	45	E	05	ENQ
F	66	f	06	ACK	46	F	06	ACK
G	67	g	07	BEL	47	G	07	BEL
H	68	h	08	BS	48	H	08	BS
I	69	i	09	HT	49	I	09	HT
J	6A	j	0A	LF	4A	J	0A	LF
K	6B	k	0B	VT	4B	K	0B	VT
L	6C	l	0C	FF	4C	L	0C	FF
M	6D	m	0D	CR	4D	M	0D	CR
N	6E	n	0E	SO	4E	N	0E	SO
O	6F	o	0F	SI	4F	O	0F	SI
P	70	p	10	DLE	50	P	10	DLE
Q	71	q	11	DC1	51	Q	11	DC1
R	72	r	12	DC2	52	R	12	DC2
S	73	s	13	DC3	53	S	13	DC3
T	74	t	14	DC4	54	T	14	DC4
U	75	u	15	NAK	55	U	15	NAK
V	76	v	16	SYN	56	V	16	SYN
W	77	w	17	ETB	57	W	17	ETB
X	78	x	18	CAN	58	X	18	CAN
Y	79	y	19	EM	59	Y	19	EM
Z	7A	z	1A	SUB	5A	Z	1A	SUB

* Table 2-2
Note: Codes are shown here in hexadecimal; to find the decimal equivalents, refer to Table E-3.

Table F-2*
Keyboard memory locations

Location			
Hex	**Decimal**		**Description**
$C000	49152	–16384	Keyboard data and strobe
$C010	49168	–16368	Any-key-down flag and clear-strobe switch

* Table 2-1

Table F-3*
Video display specifications

Display modes	40-column text; map: Figure 2-3 80-column text; map: Figure 2-4 Low-resolution color graphics; map: Figure 2-8 High-resolution color graphics; map: Figure 2-9 Double high-res color graphics; map: Figure 2-10
Text capacity	24 lines by 80 columns (character positions)
Character set	96 ASCII characters (uppercase and lowercase)
Display formats	Normal, inverse, flashing, MouseText (Table 2-4)
Low-resolution graphics	16 colors (Table 2-5), 40 horizontal by 48 vertical; map: Figure 2-8
High-resolution graphics	6 colors (Table 2-6), 140 horizontal by 192 vertical (restricted) Black-and-white: 280 horizontal by 192 vertical; map: Figure 2-9
Double high-resolution graphics	16 colors (Table 2-7), 140 horizontal by 192 vertical (no restrictions) Black-and-white: 560 horizontal by 192 vertical; map: Figure 2-10

* Table 2-3

Table F-4*
Double high-resolution graphics colors

Color	ab0	mb1	ab2	mb3	Repeated bit pattern
Black	$00	$00	$00	$00	0000
Magenta	$08	$11	$22	$44	0001
Brown	$44	$08	$11	$22	0010
Orange	$4C	$19	$33	$66	0011
Dark green	$22	$44	$08	$11	0100
Gray 1	$2A	$55	$2A	$55	0101
Green	$66	$4C	$19	$33	0110
Yellow	$6E	$5D	$3B	$77	0111
Dark blue	$11	$22	$44	$08	1000
Purple	$19	$33	$66	$4C	1001
Gray 2	$55	$2A	$55	$2A	1010
Pink	$5D	$3B	$77	$6E	1011
Medium blue	$33	$66	$4C	$19	1100
Light blue	$3B	$77	$6E	$5D	1101
Aqua	$77	$6E	$5D	$3B	1110
White	$7F	$7F	$7F	$7F	1111

* Table 2-7

Table F-5*
Video display page locations

Display mode	Display page	Lowest address		Highest address	
		Hex	Dec	Hex	Dec
40-column text, low-resolution graphics	1	$0400	1024	$07FF	2047
	2 †	$0800	2048	$0BFF	3071
80-column text	1	$0400	1024	$07FF	2047
	2 †	$0800	2048	$0BFF	3071
High-resolution graphics	1	$2000	8192	$3FFF	16383
	2	$4000	16384	$5FFF	24575
Double high-resolution graphics	1 ‡	$2000	8192	$3FFF	16383
	2 ‡	$4000	16384	$5FFF	24575

* Table 2-8

† This is not supported by firmware; for instructions on how to switch pages, refer to the section "Display Mode Switching" in Chapter 2.

‡ See the section "Double High-Resolution Graphics" in Chapter 2.

Table F-6*
Display soft switches

Name	Action	Hex	Function
ALTCHAR	W	$C00E	Off: display text using primary character set
ALTCHAR	W	$C00F	On: display text using alternate character set
RDALTCHAR	R7	$C01E	Read ALTCHAR switch (1 = on)
80COL	W	$C00C	Off: display 40 columns
80COL	W	$C00D	On: display 80 columns
RD80COL	R7	$C01F	Read 80COL switch (1 = on)
80STORE	W	$C000	Off: cause PAGE2 on to select auxiliary RAM
80STORE	W	$C001	On: allow PAGE2 to switch main RAM areas
RD80STORE	R7	$C018	Read 80STORE switch (1 = on)
PAGE2	R/W	$C054	Off: select Page 1
PAGE2	R/W	$C055	On: select Page 2 or, if 80STORE on, Page 1 in auxiliary memory
RDPAGE2	R7	$C01C	Read PAGE2 switch (1 = on)
TEXT	R/W	$C050	Off: display graphics or, if MIXED on, mixed
TEXT	R/W	$C051	On: display text
RDTEXT	R7	$C01A	Read TEXT switch (1 = on)
MIXED	R/W	$C052	Off: display only text or only graphics
MIXED	R/W	$C053	On: if TEXT off, display text and graphics
RDMIXED	R7	$C01B	Read MIXED switch (1 = on)
HIRES	R/W	$C056	Off: if TEXT off, display low-resolution graphics

Table F-6* (continued)
Display soft switches

Name	Action	Hex	Function
HIRES	R/W	$C057	On: if TEXT off, display high-resolution or, if DHIRES on, double high-resolution graphics
RDHIRES	R7	$C01D	Read HIRES switch (1 = on)
IOUDIS	W	$C07E	On: disable IOU access for addresses $C058 to $C05F; enable access to DHIRES switch†
IOUDIS	W	$C07F	Off: enable IOU access for addresses $C058 to $C05F; disable access to DHIRES switch†
RDIOUDIS	R7	$C07E	Read IOUDIS switch (1 = off)‡
DHIRES	R/W	$C05E	On: if IOUDIS on, turn on double high-resolution
DHIRES	R/W	$C05F	Off: if IOUDIS on, turn off double high resolution
RDDHIRES	R7	$C07F	Read DHIRES switch (1 = on)‡
VBL	R7	$C019	Vertical blanking

* Table 2-9

† The firmware normally leaves IOUDIS on. See also †.

‡ Reading or writing any address in the range $C070–$C07F also triggers the paddle timer and resets VBLINT (Chapter 7).

Note: W means write anything to the location, *R* means read the location, *R/W* means read or write, and *R7* means read the location and check bit 7.

Table F-7*
Monitor firmware routines

Location0	Name	Description
$C305	BASICIN	With 80-column firmware active, displays solid, blinking cursor; accepts character from keyboard
$C307	BASICOUT	Displays a character on the screen; used when the 80-column firmware is active (Chapter 3)

Table F-7* (continued)
Monitor firmware routines

Location0	Name	Description
$FC9C	CLREOL	Clears to end of line from current cursor position
$FC9E	CLEOLZ	Clears to end of line using contents of Y register as cursor position
$FC42	CLREOP	Clears to bottom of window
$F832	CLRSCR	Clears the low-resolution screen
$F836	CLRTOP	Clears top 40 lines of low-resolution screen
$FDED	COUT	Calls output routine whose address is stored in CSW (normally COUT1, Chapter 3).
$FDF0	COUT1	Displays a character on the screen (Chapter 3)
$FD8E	CROUT	Generates a carriage return character
$FD8B	CROUT1	Clears to end of line, then generates a carriage return character
$FD6A	GETLN	Displays the prompt character; accepts a string of characters by means of RDKEY
$F819	HLINE	Draws a horizontal line of blocks
$FC58	HOME	Clears the window and puts cursor in upper-left corner of window
$FD1B	KEYIN	With 80-column firmware inactive, displays checkerboard cursor; accepts character from keyboard
$F800	PLOT	Plots a single low-resolution block on the screen
$F94A	PRBL2	Sends 1 to 256 blank spaces to the output device
$FDDA	PRBYTE	Prints a hexadecimal byte
$FF2D	PRERR	Sends ERR and Control-G to the output device

Table F-7* (continued)
Monitor firmware routines

Location0	Name	Description
$FDE3	PRHEX	Prints 4 bits as a hexadecimal number
$F941	PRNTAX	Prints contents of A and X in hexadecimal
$FD0C	RDKEY	Displays blinking cursor; goes to standard input routine, normally KEYIN or BASICIN
$F871	SCRN	Reads color value of a low-resolution block
$F864	SETCOL	Sets the color for plotting in low resolution
$FC24	VTABZ	Sets cursor vertical position
$F828	VLINE	Draws a vertical line of low-resolution blocks

* Table 3-1

Table F-8a*
Control characters, 80-column firmware off

Control character	ASCII name	Apple IIe name	Action taken by COUT1
Control-G	BEL	Bell	Produces a 1000 Hz tone for 0.1 second
Control-H	BS	Backspace	Moves cursor position one space to the left; from left edge of window, moves to right end of line above
Control-J	LF	Line feed	Moves cursor position down to next line in window, scrolls if needed
Control-M	CR	Return	Moves cursor position to left end of next line in window, scrolls if needed

* Table 3-3a

Table F-8b*
Control characters, 80-column firmware on

Control character	ASCII name	Apple IIe name	Action taken by BASICOUT
Control-G	BEL	Bell	Produces a 1000 Hz tone for 0.1 second
Control-H	BS	Backspace	Moves cursor position one space to the left; from left edge of window, moves to right end of line above
Control-J	LF	Line feed	Moves cursor position down to next line in window; scrolls if needed
Control-K†	VT	Clear EOS	Clears from cursor position to the end of the screen
Control-L†	FF	Home and clear	Moves cursor position to upper-left corner of window and clears window
Control-M	CR	Return	Moves cursor position to left end of next line in window, scrolls if needed
Control-N†	SO	Normal	Sets display format normal
Control-O†	SI	Inverse	Sets display format inverse
Control-Q†	DC1	40-column	Sets display to 40-column
Control-R†	DC2	80-column	Sets display to 80-column
Control-S‡	DC3	Stop-list	Stops listing characters on the display until another key is pressed
Control-U†	NAK	Quit	Deactivates 80-column video firmware
Control-V†	SYN	Scroll	Scrolls the display down one line, leaving the cursor in the current position
Control-W†	ETB	Scroll-up	Scrolls the display up one line, leaving the cursor in the current position

Table F-8b* (continued)
Control characters, 80-column firmware on

Control character	ASCII name	Apple IIe name	Action taken by BASICOUT
Control-X	CAN	Disable MouseText	Disables MouseText character display; use inverse uppercase
Control-Y†	EM	Home	Moves cursor position to upper-left corner of window (but doesn't clear)
Control-Z†	SUB	Clear line	Clears the line the cursor position is on
Control-[	ESC	Enable MouseText	Maps inverse uppercase characters to MouseText characters
Control-\†	FS	Forward space	Moves cursor position one space to the right, from right edge of window, moves it to left end of line below
Control-]†	GS	Clear EOL	Clears from the current cursor position to the end of the line (that is, to the right edge of the window)
Control-_	US	Up	Moves cursor up a line, no scroll

* Table 3-3b
† Doesn't work from the keyboard
‡ Only works from the keyboard.

Table F-9*
Text format control values

Mask value		
Dec	**Hex**	**Display format**
255	$FF	Normal, uppercase, and lowercase
127	$7F	Flashing, uppercase, and symbols
63	$3F	Inverse, uppercase, and lowercase

* Table 3-5
Note: These mask values apply only to the primary character set (see text).

Table F-10*
Escape codes

Escape code	Function
Escape @	Clears window and homes cursor (places it in upper-left corner of screen), then exits from escape mode
Escape A or a	Moves cursor right one line; exits from escape mode
Escape B or b	Moves cursor left one line; exits from escape mode

Table F-10* (continued)
Escape codes

Escape code	Function
Escape C or c	Moves cursor down one line; exits from escape mode
Escape D or d	Moves cursor up one line; exits from escape mode
Escape E or e	Clears to end of line; exits from escape mode
Escape F or f	Clears to bottom of window; exits from escape mode
Escape I or i *or* Escape Up Arrow	Moves the cursor up one line; remains in escape mode (see text)
Escape J or j *or* Escape Left Arrow	Moves the cursor left one space; remains in escape mode (see text)
Escape K or k *or* Escape Right Arrow	Moves the cursor right one space; remains in escape mode (see text)
Escape M or m *or* Escape Down Arrow	Moves the cursor down one line; remains in escape mode (see text)
Escape 4	If 80-column firmware is active, switches to 40-column mode; sets links to BASICIN and BASICOUT; restores normal window size; exits from escape mode
Escape 8	If 80-column firmware is active, switches to 80-column mode; sets links to BASICIN and BASICOUT; restores normal window size; exits from escape mode
Escape Control-D	Disables control characters; only carriage return, line feed, BELL, and backspace have an effect when printed
Escape Control-E	Reactivates control characters
Escape Control-Q	If 80-column firmware is active, deactivates 80-column firmware; sets links to KEYIN and COUT1; restores normal window size; exits from escape mode

* Table 3-6

Table F-11*
Pascal video control functions

Control-	Hex	Function performed
E or e	$05	Turns cursor on (enables cursor display)
F or f	$06	Turns cursor off (disables cursor display)
G or g	$07	Sounds bell (beeps)
H or h	$08	Moves cursor left one column. If cursor was at beginning of line, moves it to end of preceding line
J or j	$0A	Moves cursor down one row; scrolls if needed
K or k	$0B	Clears to end of screen
L or l	$0C	Clears screen; moves cursor to upper-left of screen
M or m	$0D	Moves cursor to column 0
N or n	$0E	Displays subsequent characters in normal video (Characters already on display are unaffected.)
O or o	$0F	Displays subsequent characters in inverse video (Characters already on display are unaffected.)
V or v	$16	Scrolls screen up one line; clears bottom line
W or w	$17	Scrolls screen down one line; clears top line
Y or y	$19	Moves cursor to upper-left (home) position on screen
Z or z	$1A	Clears entire line that cursor is on
| or \	$1C	Moves cursor right one column; if at end of line, does Control-M
} or]	$1D	Clears to end of the line the cursor is on, including current cursor position; does not move cursor
^ or 6	$1E	GOTOxy: initiates a GOTOxy sequence; interprets the next two characters as x+32 and y+32, respectively
_	$1F	If not at top of screen, moves cursor up one line

* Table 3-10

Table F-12*
Bank select switches

Name	Action	Hex	Function
	R	$C080	Read RAM; no write; use $D000 bank 2.
	RR	$C081	Read ROM; write RAM; use $D000 bank 2.
	R	$C082	Read ROM; no write; use $D000 bank 2.
	RR	$C083	Read and write RAM; use $D000 bank 2.
	R	$C088	Read RAM; no write; use $D000 bank 1.
	RR	$C089	Read ROM; write RAM; use $D000 bank 1.
	R	$C08A	Read ROM; no write; use $D000 bank 1.
	RR	$C08B	Read and write RAM; use $D000 bank 1.
RDBNK2	R7	$C011	Read whether $D000 bank 2 (1) or bank 1 (0).
RDLCRAM	R7	$C012	Reading RAM (1) or ROM (0).
ALTZP	W	$C008	Off: use main bank, page 0 and page 1.
ALTZP	W	$C009	On: use auxiliary bank, page 0 and page 1.
RDALTZP	R7	$C016	Read whether auxiliary (1) or main (0) bank.

* Table 4-6
Note: R means read the location, *W* means write anything to the location, *R/W* means read or write, and *R7* means read the location and then check bit 7.

Table F-13*
Auxiliary-memory select switches

Name	Function	Location		Notes
		Hex	Decimal	
RAMRD	Read auxiliary memory	$C003	49155 –16381	Write
	Read main memory	$C002	49154 –16382	Write
	Read RAMRD switch	$C013	49171 –16365	Read
RAMWRT	Write auxiliary memory	$C005	49157 –16379	Write
	Write main memory	$C004	49156 –16380	Write
	Read RAMWRT switch	$C014	49172 –16354	Read
80STORE	On: access display page	$C001	49153 –16383	Write
	Off: use RAMRD, RAMWRT	$C000	49152 –16384	Write
	Read 80STORE switch	$C018	49176 –16360	Read
PAGE2	Page 2 on (aux. memory)	$C055	49237 –16299	†
	Page 2 off (main memory)	$C054	49236 –16300	†
	Read PAGE2 switch	$C01C	49180 –16356	Read
HIRES	On: access high-res pages	$C057	49239 –16297	‡
	Off: use RAMRD, RAMWRT	$C056	49238 –16298	‡
	Read HIRES switch	$C01D	49181 –16355	Read
ALTZP	Aux. stack & zero page	$C009	49161 –16373	Write
	Main stack & zero page	$C008	49160 –16374	Write
	Read ALTZP switch	$C016	49174 –16352	Read

* Table 4-7
† When 80STORE is on, the PAGE2 switch selects main or auxiliary display memory.
‡ When 80STORE is on, the HIRES switch enables you to use the PAGE2 switch to switch between the high-resolution Page 1 area in main memory or auxiliary memory.

Table F-14*
48K RAM transfer routines

Name	Action	Hex	Function
AUXMOVE	JSR	$C311	Moves data blocks between main and auxiliary 48K memory
XFER	JMP	$C314	Transfers program control between main and auxiliary 48K memory

* Table 4-8

Table F-15*
I/O memory switches

Name	Function	Location		Notes
		Hex	Decimal	
SLOTC3ROM	Slot ROM at $C300	$C00B	49163 –16373	Write
	Internal ROM at $C300	$C00A	49162 –16374	Write
	Read SLOTC3ROM switch	$C017	49175 –16361	Read
SLOTCXROM	Slot ROM at $Cx00	$C006	49159 –16377	Write
	Internal ROM at $Cx00	$C007	49158 –16378	Write
	Read SLOTCXROM switch	$C015	49173 –16363	Read

* Table 6-5

Table F-16*
I/O routine offsets and registers under Pascal 1.1 protocol

Address	Offset for	X register	Y register	A register
$Cs0D	Initialization			
	On entry	$Cs	$s0	
	On exit	Error code	(unchanged)	(unchanged)
$Cs0E	Read			
	On entry	$Cs	$s0	
	On exit	Error code	(unchanged)	Character read
$Cs0F	Write			
	On entry	$Cs	$s0	Char. to write
	On exit	Error code	(unchanged)	(unchanged)
$Cs10	Status			
	On entry	$Cs	$s0	Request (0 or 1)
	On exit	Error code	(changed)	(unchanged)

* Table 6-7

Appendix G

Using an 80-Column Text Card

This appendix explains how to use 80-column text cards with high-level languages. Information about using 80-column text cards with assembly-language programs through the Apple IIe Monitor firmware is found in Chapter 3 of this manual. The information in this appendix applies to the Apple IIe 80-Column Text Card and the Apple IIe Extended 80-Column Text Card.

If you are using Applesoft, ProDOS, or DOS you can choose to leave the 80-column text card inactive after installing it. You will want to do this when running software that does not take advantage of the 80-column display capability.

The startup procedure for displaying 80 columns of text on your Apple IIe depends on which operating system you plan to use. Starting up the system with Apple II Pascal or CP/M is very easy; the operating system does it for you. The procedures for starting up with ProDOS or DOS 3.3 are slightly more complicated, but not difficult.

Starting up with Pascal or CP/M

Pascal programmers don't have to activate the text card because Pascal does it for them. If you use the Pascal language or the CP/M operating system, displaying 80 columns of text is automatic once you've installed the card. Simply start up your system with any Pascal or CP/M startup disk.

- *CP/M:* Control Program for Microprocessors is a trademark of Digital Research. To use the CP/M operating system with your Apple IIe, make sure the SOFTCARD by Microsoft or the Z-Engine by Advanced Logic Systems is correctly installed before you start up the computer.
- *Coprocessor cards and interrupts:* Some coprocessor cards that were designed for use in the Apple II Plus may not work with an Apple IIe without some modification. There could be problems if you want to use interrupts on the Apple IIe. If you are having problems with a coprocessor card, check with the card's manufacturer for their recommendations.

Refer to the operating system reference manual for your version of Apple Pascal for more information.

When using Apple II Pascal 1.1, you'll probably want to run the program SETUP to make the Up Arrow and Down Arrow keys functional. SETUP is a self-documenting program on the Pascal disk APPLE3. Pascal versions 1.2 and later are already configured to use the Up Arrow and Down Arrow keys.

Starting up with ProDOS or DOS 3.3

ProDOS and DOS 3.3 both look for a startup program on the startup (boot) disk as soon as the operating system has been loaded and begins executing. If the operating system finds the program, named STARTUP on a ProDOS disk and usually HELLO on a DOS 3.3 disk, it will execute the program.

You can write a customized startup program that will set up the 80-column text card in any state you need. Just be sure it is on your startup disk and has the startup filename.

Here is a sample Applesoft startup program that works with both ProDOS and DOS 3.3:

```
10 HOME:D$=CHR$(4)
20 PRINT D$;"PR#3"
30 END
```

You can do whatever you wish with the program from line 20 on. Note that the screen will have switched to 80-column text mode after line 20.

- *By the way:* If you arrange to have the card active automatically, you will still, of course, be able to switch into 40-column mode.

Using the GET Command

The presence of an active 80-column text card in the IIe requires that BASIC programmers use some alternative to Applesoft's INPUT command if their programs are to be userproof. Applesoft programmers should use either the GET command or the RDKEY or GETLN subroutines.

This is because the escape sequences used to switch back and forth between modes or to deactivate the card sometimes make it necessary to accept escape sequences in INPUT mode when using an 80-column card. Because the program accepts escape sequences typed from the keyboard, your program will not be userproof against accidental sequences typed in response to an INPUT command.

To get around this problem, you can use the GET command instead. The program does not read escape sequences typed from the keyboard in response to a GET command. This means that your users can err in their responses without endangering the display.

When to switch modes versus when to deactivate

When using BASIC, deactivate the text card whenever a previous (BASIC) program has left the card active (leaving a solid cursor on the screen) or whenever you want to send output to a peripheral device.

Switch back and forth between 40-column and 80-column displays for visual appeal. For full use of the control characters described later, your card must be active, although it can display in either 40-column or 80-column mode.

Original IIe Tabbing in Applesoft: You must switch to a 40-column display to use Applesoft comma tabbing or the HTAB command.

Display features with the text card

With an active 80-column card you can issue BASIC and PRODOS commands in lowercase characters. You can also issue commands in lowercase from the keyboard, that is, in immediate mode. This is particularly convenient because REM statements and data within quotation marks remain in lowercase as they were typed.

If you are using DOS 3.3, you must issue commands in uppercase whether or not your card is active.

INVERSE, FLASH, NORMAL, HOME

There are several commands you can give your computer from Applesoft BASIC to affect the appearance of text on the screen. All of these features are described in the *Applesoft BASIC Programmer's Reference Manual.*

- INVERSE tells the computer to display black characters on a white background instead of the normal display of white characters on a black background. This command is normally only available for uppercase characters, but with an active 80-column text card it is available for uppercase and lowercase characters.
- FLASH causes subsequently printed characters to blink quickly between inverse and normal characters. You can turn off the FLASH command by typing the NORMAL command. The FLASH command is normally available only with uppercase characters; it is not available at all while the card is active.
- NORMAL tells the computer to turn off the INVERSE or FLASH command and to display subsequently printed characters normally. It works the same way with the card active or inactive.
- HOME clears the screen and returns the cursor to the upper-left corner of the screen. Both the NORMAL HOME and INVERSE HOME commands are available while the card is active, but INVERSE HOME works a little differently when the card is active.

❖ *By the way:* The FLASH and INVERSE commands can be used to highlight important screen messages within a BASIC program.

Important If you are using the FLASH command (which means the 80-column text card is inactive) and then type `PR#3` to activate the card, the screen turns white as the cursor goes to the HOME position. Whatever you type appears in black characters on the white screen. If you list or run an Applesoft BASIC program, some of the characters will appear as MouseText characters. To avoid this, remember to use the NORMAL or INVERSE command before you exit the program.

Tabbing with the original Apple IIe

You cannot use conventional 40-column tabbing in BASIC with the original model Apple IIe with an 80-column display. You do not have to turn off your card, but you must switch out of 80-column mode to use the HTAB command or to use comma tabbing.

When an original Apple IIe is displaying 80-column text, you should use the POKE 1403 command for horizontal tabbing in the right half of the screen instead of the HTAB command.

Comma tabbing with the original Apple IIe

In BASIC you can use commas in PRINT statements to instruct the computer to display all or part of your output in columns. This is known as *comma tabbing*. You can use this method of tabbing as long as the screen is displaying 40 columns (that is, with the card inactive or after issuing the Escape 4 command to switch to 40-column mode). You cannot use this method of tabbing with an 80-column display. If you try to do so, characters will be placed in memory outside the screen area and may change programs or data in memory.

HTAB and POKE 1403

The VTAB (vertical tab) and HTAB (horizontal tab) statements can be used to place the cursor at a specific location on the screen before printing characters. The largest value you can use with the VTAB statement is 24; the largest for HTAB is 255. The VTAB command works just the same in an 80-column display as it does in a 40-column display.

On the original Apple IIe, the HTAB command causes the cursor to wrap around to the next line after it reaches the 40th column, so you cannot use this command to position the cursor in the last 40 columns while the screen is displaying 80 columns.

POKE 1403 is specifically designed to solve this problem. Using the POKE 1403 command allows you to tab horizontally across the extra 40 columns provided by the 80-column text card.

If you want to tab past column 40 while the card is active and the screen is displaying 80 columns, use the following, where n is a number from 0 to 79:

```
POKE 1403, n
```

When you use the HTAB command, HTAB 1 places the cursor at the leftmost position on the screen. When you use the POKE 1403 command, "`POKE 1403,0`" places the cursor at the leftmost position on the screen.

Using control characters with the card

Using BASIC with an active 80-column text card increases the number of functions you can perform with control characters. Originally control-character commands were so named because they were given from the keyboard by pressing the Control key in conjunction with another key. You can perform the same functions from your programs by using an equivalent control-character code. Commands based on these two-key combinations are called *control-character commands* even when they must be issued from a program.

Control characters and their functions

Table G-1 lists the control-character commands supported by BASIC with an 80-column card. The table includes the corresponding command code, its function, and whether a given command can be executed from the keyboard as well as from a program.

Table G-1
Control characters, 80-column firmware on

Control character	ASCII name	Apple IIe name	Action taken by BASICOUT
Control-G	BEL	Bell	Produces a 1000 Hz tone for 0.1 second
Control-H	BS	Backspace	Moves cursor position one space to the left; from left edge of window, moves to right end of line above
Control-J	LF	Line feed	Moves cursor position down to next line in window; scrolls if needed
Control-K*	VT	Clear EOS	Clears from cursor position to the end of the screen
Control-L*	FF	Home and clear	Moves cursor position to upper-left corner of window and clears window
Control-M	CR	Return	Moves cursor position to left end of next line in window, scrolls if needed
Control-N*	SO	Normal	Sets display format normal
Control-O*	SI	Inverse	Sets display format inverse
Control-Q*	DC1	40-column	Sets display to 40-column
Control-R*	DC2	80-column	Sets display to 80-column
Control-S†	DC3	Stop-list	Stops listing characters on the display until another key is pressed
Control-U*	NAK	Quit	Deactivates 80-column video firmware
Control-V*	SYN	Scroll	Scrolls the display down one line, leaving the cursor in the current position

Table G-1 (continued)
Control characters, 80-column firmware on

Control character	ASCII name	Apple IIe name	Action taken by BASICOUT
Control-W*	ETB	Scroll-up	Scrolls the display up one line, leaving the cursor in the current position
Control-X	CAN	Disable MouseText	Disables MouseText character display; use inverse uppercase
Control-Y*	EM	Home	Moves cursor position to upper-left corner of window (but doesn't clear)
Control-Z*	SUB	Clear line	Clears the line the cursor position is on
Control-[	ESC	Enable MouseText	Maps inverse uppercase characters to MouseText characters
Control-*	FS	Forward space	Moves cursor position one space to the right, from right edge of window, moves it to left end of line below
Control-]*	GS	Clear EOL	Clears from the current cursor position to the end of the line (that is, to the right edge of the window)
Control-_	US	Up	Moves cursor up a line, no scroll

* Doesn't work from the keyboard
† Only works from the keyboard

How to use control-character codes in programs

To issue a control-character command from a program, use the ASCII decimal code that corresponds to the control character. (See Table G-1.)

The following example shows how to use ASCII decimal codes in an Applesoft BASIC program. Type

```
HOME [?] NEW
10 PRINT CHR$(15): PRINT "MAKE HAY"
20 PRINT CHR$(14): PRINT "WHILE THE SUN SHINES"
RUN
```

(CHR$ is the Applesoft BASIC command that signifies that a control-character function is to be performed.)

You will get

```
]NEW
]10 PRINT CHR$(15): PRINT "MAKE HAY"
]20 PRINT CHR$(14): PRINT "WHILE THE SUN SHINES"
]RUN
MAKE HAY
WHILE THE SUN SHINES
]■
```

The ASCII decimal codes for inverse video (Control-O) and normal video (Control-N) are 15 and 14. When the PRINT statements in the example are executed, the display switches to inverse and prints MAKE HAY, then switches back to a normal display and prints WHILE THE SUN SHINES.

A word of caution to Pascal programmers

Avoid writing Control-U or Control-Q to the console from a Pascal program. Either one puts the system into a state that will eventually cause Pascal to crash.

See Chapter 3 in this manual for a description of control-character functions.

You can't send control characters from the keyboard to the 80-column firmware when using Pascal. The only exceptions to this rule are Control-M (CR) and Control-G (BEL).

Appendix H

Programming With the Super Serial Card

For more information about the installation and operation of the SSC, see the Super Serial Card manual.

This appendix briefly tells how to use the Apple II Super Serial Card (SSC) from programs and how to find the SSC through software, and describes the commands supported by the SSC.

The SCC is one of the most common serial interface cards used with the Apple IIe, and the Apple IIc's serial ports operate very much like the Super Serial Card. This similarity should make it easier for you to write programs for both the Apple IIe and Apple IIc.

Locating the card

The Pascal 1.1 firmware protocol is described in Chapter 6.

Locations $Cs05, $Cs07, $Cs0B, and $Cs0C (where s is the number of the slot where the SSC is installed) contain the identification bytes for the Super Serial Card. The identification byte's values are

$Cs05	$38
$Cs07	$18
$Cs0B	$01
$Cs0C	$31

Operating modes

The Super Serial Card has two main operating modes: printer mode and communications mode. There is nothing you can do from software to change from one mode to the other because they are set by the position of the jumper block.

❖ *Note to software developers:* If you are writing software that depends on the SSC being in a given operating mode, make sure that your documentation tells the user to set up the SSC in the proper way.

In printer mode, the SSC is set to send data to a printer, local terminal, or other serial device. In communications mode, the SSC is set to operate with a modem. From communications mode, the SSC can enter a special mode called *terminal mode*. In terminal mode the Apple IIe acts like an unintelligent terminal.

Operating commands

For each of the operating modes, you can control many aspects of data transmission such as baud rate, data format, and line feed generation.

Your program can change these aspects by sending control codes as commands to the card. All commands are preceded by a command character and followed by a carriage return character ($0D).

The command character is usually Control-I in printer mode and Control-A in communications mode and terminal mode. In the command examples in the following sections, Control-I is used unless the command being described is available only in communications mode or terminal mode. A carriage return character is represented by its ASCII symbol, CR.

There are three types of command formats:

- A number, represented by n, followed by an uppercase letter with no space between the characters (for example, 4D to set data format 4).
- An uppercase letter by itself (for example, R to reset the SSC).
- An uppercase letter followed by a space and then either E to enable or D to disable a feature (for example, L D to disable automatic insertion of line feed characters).

The allowable range of n is given in each command description that follows.

The choice of enable or disable is indicated with E/D. The underscore character (_) before the E/D in commands that allow enable/disable is to remind you that a space is required there.

The SSC checks only numbers and the first letters of commands and options. (All such letters must be uppercase.) Further letters, which you can add to assist your memory, have no effect on the SSC. For example, XOFF Enable is the same as X E. The SSC ignores invalid commands.

Important The spaces in command examples are there for clarity; generally you will not use spaces in a command string. Where a space is required in a command string, an underscore (_) character will appear in the text as a reminder.

The command character

The normal command character is Control-I (ASCII $09) in printer mode, or Control-A (ASCII $01) in communications mode. If you want to change the command character from Control-I to Control-something else, send Control-I Control-something else. For example, to change the command character to Control-W, send Control-I Control-W. To change back, send Control-W Control-I. No return character is required after either of these commands.

Here is how to do this in BASIC and Pascal:

Applesoft BASIC:

```
PRINT CHR$(9); "new command character"
```

Pascal:

```
WRITELN (CHR(9), 'new command character');
```

You can send the command character itself through the SSC by sending it twice in a row: Control-I Control-I; no return character is required after this command. This special command allows you to transmit the command character without affecting the operation of the SSC, and without having to change to another command character and then back again later.

Baud rate, nB

You can use this command to override the physical settings of switches SW1-1 through SW1-4 on the SSC. For example, to change the baud rate to 135, send Control-I 4B CR to the SSC.

Table H-1
Baud rate selections

n	SSC baud rate	n	SSC baud rate
0	Use SW1-1 to SW1-4	8	1200
1	50	9	1800
2	75	10	2400
3	109.92 (110)	11	3600
4	134.58 (135)	12	4800
5	150	13	7200
6	300	14	9600
7	600	15	19200

Table H-2
Data format selections

n	Data bits	Stop bits
0	8	1
1	7	1
2	6	1
3	5	1
4	8	2 *
5	7	2
6	6	2
7	5	2 †

* 1 with parity options 4 through 7
† 11/2 with parity options 0 through 3

Data format, nD

You can override the settings of switch SW2-1 with this command. The table below shows how many data and stop bits correspond to each value of n. For example, Control-I 2D CR makes the SSC transmit each character in the form one start bit (always transmitted), six data bits, and one stop bit.

Table H-3
Parity selections

n	Parity to use
0,2,4, or 6	None (default value)
1	Odd parity (odd total number of ones)
3	Even parity (even total number of ones)
5	MARK parity (parity bit always 1)
7	SPACE parity (parity bit always 0)

Parity, nP

You can use this command to set the parity that you want to use for data transmission and reception. There are five parity options available, described in Table H-3.

For example, the command string Control-I 1P CR makes the SSC transmit and check for odd parity. Odd parity means that the high bit of every character is 0 if there is an odd number of 1 bits in that character, or 1 if there is an even number of 1 bits in the character, making the total number of 1 bits in the character always odd. This is an easy (but not foolproof) way to check data for transmission errors. Parity errors are recorded in a status byte.

Set time delay, nC, nL, and nF

Some printers can't keep up with the Apple IIe when they are doing certain operations. You may need to change default settings on the SSC to give a printer the time it needs.

Table H-4
Time delay selections

n	Time delay
0	None
1	32 milliseconds
2	250 milliseconds (1/4 second)
3	2 seconds

The nC command overrides the setting of switch SW2-2 on the SSC. That switch provides two choices: either no delay or a 250 millisecond delay after the SSC sends a carriage return character.

The nL command allows time after a line feed character for a printer platen to turn so that the paper is vertically positioned to receive the next line.

The nF command allows time after a form feed character for the printer platen to move the paper form to the top of the next page (typically a longer time than a line feed).

Consult the user manual for a given printer to find out how much time it takes to move its print head and platen so that you can determine an appropriate set of values for these three delays. The idea is to have at least enough time for the printer parts to move the required distance, but not so much time that overall printing speed is slowed down drastically. Many printers require no delays because they have a buffer built in to keep accepting characters even while they are doing form feeds and so on.

A typical setup for a *very* slow printer would be Control-I 2C CR, Control-I 2L CR, Control-I 3F CR; that is, the SSC waits 250 milliseconds after transmitting carriage returns, 250 milliseconds after transmitting line feeds, and 2 seconds after transmitting form feed characters.

Echo characters to the screen, E_E/D

For the Apple IIe, as for most computers, displaying (echoing) a character on the video screen during communications is a separate step from receiving it from the keyboard, though we tend to think if these as one step, as on a typewriter. For example, if you send Control-A E_D CR, the SSC does not forward incoming characters to the Apple IIe screen. This can be used to hide someone's password entered at a terminal, or to avoid double display of characters.

This command is used in communications mode only.

Automatic carriage return, C

Sending Control-I C CR to the SSC causes it to generate a carriage return character (ASCII CR) whenever the column count exceeds the current printer line-width limit. This command is used in printer mode only.

Important Once this option is on, only clearing the high-order bit at location $578+s (where s is the slot the SSC is in) can turn this option back off. This option is normally off.

Automatic line feed, L_E/D

You can use this command to have the SSC automatically generate and transmit a line feed character after each carriage return character. This overides the setting of switch SW2-5. For example, send Control-I L_E CR to your printer to print listings or double-spaced manuscripts for editing.

Mask line feed in, M_E/D

If you send Control-I M_E CR to the SSC, it will ignore any incoming line feed character that immediately follows a carriage return character.

Reset card, R

Sending Control-I R CR to the SSC has the same effect as sending a PR#0 and an IN#0 to a BASIC program and then resetting the SSC. This command cancels all previous commands to the SSC and puts the physical switch settings back into force.

Specify screen slot, S

In communications mode, you can specify the slot number of the device where you want text or listings displayed with this command. (Normally this is slot 0, the Apple IIe video screen.) This allows chaining of the SSC to another card slot, such as an 80-column text card. For the firmware in the SSC to pass on information to the firmware in the other card, the other card must have an output entry point within its $Cs00 space; this is the case for all currently available 80-column cards for the Apple IIe.

For example, let's say you have the SSC in slot 2 with a remote terminal connected to it, and an 80-column card in slot 3. Send Control-A 3S CR to cause the data from the remote terminal to be chained through the card in slot 3, so that it is displayed on the Apple IIe in 80-column format. (Not available in Pascal.)

Translate lowercase characters, nT

The Apple IIe Monitor translates all incoming lowercase characters into uppercase ones before sending them to the video screen or to a BASIC program. The nT command has four options, which are shown in Table H-5.

Table H-5
Lowercase character display options

n	Action
0	Change all lowercase characters to uppercase ones before passing them to a BASIC program or to the video screen. This is the way the Apple IIe monitor handles lowercase.
1	Pass along all lowercase characters unchanged. The appearance of the lowercase characters on the Apple II screen is undefined (garbage).
2	Display lowercase characters as uppercase inverse characters (that is, as black characters on a white background).
3	Pass lowercase characters to programs unchanged, but display lowercase as uppercase, and uppercase as inverse uppercase (that is, as black characters on a white background).

Suppress control characters, Z

If you issue the Z command described here, all further commands are ignored; this is useful if the data you are transmitting, such as graphics data, contains bit patterns that the SSC can mistake for control characters.

Sending Control-I Z CR to the SSC prevents it from recognizing any further control characters (and hence commands) whether coming from the keyboard or contained in a stream of characters sent to the SSC.

Important The only way to reinstate command recognition after the Z command is to either reinitialize the SSC, or clear the high-order bit at location $5F8+s (where s is the number of the slot in which the SSC is installed).

Find keyboard, F_E/D

You can use this command to make the SSC ignore keyboard input.

For example, you can include Control-I F_D CR in a program, followed by a routine that retrieves data through the SSC, followed by Control-I F_E CR to turn the keyboard back on.

XOFF recognition, X_E/D

Sending Control-I X_E CR to the SSC causes it to look for any XOFF ($13) character coming from a device attached to the SSC, and to respond to it by halting transmission of characters until the SSC receives an XON ($11) from the device, signaling the SCC to continue transmission. In printer mode, this function is normally turned off.

Important In printer mode, full-duplex communication may not work with XOFF recognition turned on, so be careful.

Tab in BASIC, T E/D

In printer mode only, if you send Control-I T_E CR to the SSC, the BASIC horizontal position counter is left equal to the column count. All tabs work, including back-tabs. Tabs beyond column 40 require a POKE to location 36. Commas only work as far as column 40, and BASIC programs will be listed in 40-column format.

Note that this use of tabbing is specific to the SSC—it doesn't go through the 80-column firmware.

Terminal mode

From communications mode, the SSC can enter terminal mode and make the Apple IIe act like an unintelligent terminal. This is useful for connecting the Apple IIe to a computer timesharing service, or for conversing with another Apple II.

Entering terminal mode, T

Send Control-A T CR to enter terminal mode. This causes the Apple IIe to function as a full-duplex unintelligent terminal. You can use this command together with the Echo command to simulate the half-duplex terminal mode of the old Apple II Communications Card.

❖ *By the way:* If you enter terminal mode and don't see what you type echoed on the Apple video screen, probably the modem link has not yet been established, or you need to use the Echo Enable command (Control-A E_E CR).

Transmitting a break, B

Sending Control-A B CR causes the SSC to transmit a 233-millisecond break signal, recognized by most time-sharing systems as a signoff.

Special characters, S_E/D

If you send Control-A S_D CR, the SSC will treat the Escape key like any other key.

Quitting terminal mode, Q

Send Control-A Q CR to the SSC to exit from terminal mode.

SSC error codes

The SSC uses I/O scratchpad address $678+s (s is the number of the slot that the SSC is in) to record status after a read operation. The firmware calls this byte STSBYTE. Table H-6 lists the bit definitions of this byte.

Table H-6
STSBYTE bit definitions

Bit	"1" means	"0" means
0	Parity error occurred	No parity error occurred
1	Framing error occurred	No framing error occurred
2	Overrun occurred	No overrun occurred
3	Carrier lost	Carrier present
5	Error occurred	No error occurred

The terms **parity, framing error,** and **overrun** are defined in the glossary.

Bits 0, 1, and 2 are the same as the corresponding three bits of the ACIA Status Register of the SSC. Bit 3 indicates whether or not the Data Carrier Detect (DCD) signal went false at any time during the receive operation. Bit 5 is set if any of the other bits are set, as an overall error indicator. If bit 5 is the only bit set, an unrecognized command was detected. If all bits are 0, no error occurred.

These error codes begin with the number 32 to avoid conflicting with previously defined and documented system error codes.

In BASIC, you can check this status byte via a PEEK $678+s (s is the SSC slot), and reset it with a POKE command at the same location.

In Pascal, the IORESULT function returns the error code value.

❖ *By the way:* Any character—including the carriage return at the end of a WRITELN statement—will cause posting of a new value in IORESULT.

Table H-7 shows the possible combinations of error bits corresponding to these decimal error codes.

Table H-7
Error codes and bits

Error code*	Carrier lost	Overrun	Framing error	Parity error
0		No error		
32		Illegal command		
33	No	No	No	Yes
34	No	No	Yes	No
35	No	No	Yes	Yes
36	No	Yes	No	No
37	No	Yes	No	Yes
38	No	Yes	Yes	No
39	No	Yes	Yes	Yes
40	Yes	No	No	No
41	Yes	No	No	Yes
42	Yes	No	Yes	No
43	Yes	No	Yes	Yes
44	Yes	Yes	No	No
45	Yes	Yes	No	Yes
46	Yes	Yes	Yes	No
47	Yes	Yes	Yes	Yes

* Result of PEEK $678+s in BASIC or IORESULT in Pascal

The ACIA

The Asynchronous Communication Interface Adapter (ACIA) chip is the heart of the Super Serial Card. It takes the 1.8432 MHz signal generated by the crystal oscillator on the SSC and divides it down to one of the 15 baud rates that it supports. The ACIA also handles all incoming and outgoing signals of the RS232-C serial protocol that the ACIA supports.

The ACIA registers control hardware handshaking and select the baud rate, data format, and parity. The ACIA also performs parallel to serial and serial to parallel data conversion, and buffers data transfers.

SSC firmware memory use

Table H-8 is an overall map of the locations that the SSC uses, both in the Apple IIe and in the SSC's own firmware address space.

Table H-8
Memory use map

Address	Name of area	Contents
$0000–$00FF	Page zero	Monitor pointers, I/O hooks, and temporary storage.
$04xx–$07xx	Peripheral slot RAM	Locations (8 per slot) in Apple IIe pages $04 through $07. SSC uses all 8 of them.
$C0(8+s)0–$C0(8+s)F	Peripheral card I/O space	Locations (16 per slot) for general I/O. SSC uses 6 bytes.
$Cs00–$CsFF	Peripheral card ROM space	One 256-byte page reserved for card in slot s; first page of SSC firmware.
$C800–$CFFF	Expansion ROM	Eight 256-byte pages reserved for 2K ROM or PROM. SSC maps its firmware onto $C800–$CEFF.

Zero-page locations

Table H-9
Zero-page locations used by the SSC

Address	Name	Description
$24*	CH	Monitor pointer to current position of cursor on screen
$26	SLOT16	Usually (slot x 16); that is, $s0
$27	CHARACTER	Input or output character
$28*	BASL	Monitor pointer to current screen line
$2A	ZPTMP1	Temporary storage (various uses)
$2B	ZPTMP2	Temporary storage (various uses)
$35	ZPTEMP	Temporary storage (various uses)
$36*	CSWL	BASIC output hook (not for Pascal)
$37*	CSWH	High byte of CSW
$38*	KSWL	BASIC input hook (not for Pascal)
$39*	KSWH	High byte of KSW
$4E*	RNDL	Random number location, updated when looking for a keypress (not used when initialized by Pascal)

* Not used when Pascal initializes SSC

Peripheral-card I/O space

There are 16 bytes of I/O space allocated to each slot in the Apple IIe. Each set begins at address $C080 + (slot x 16); for example, if the SSC is in slot 3, its group of bytes extends from $C0B0 to $C0BF. Table H-10 interprets the six bytes the SSC uses.

Table H-10
Address register bits interpretation

Address	Register	Bits	Interpretation
$C081+s0	DIPSW1	0	SW1-6 is OFF when 1, ON when 0.
	(SW1-x)	1	SW1-5 is OFF when 1, ON when 0.
		4–7	Same as above for SW1-4 through SW1-1.

Table H-10 (continued)
Address register bits interpretation

Address	Register	Bits	Interpretation
$C082+s0	DIPSW2	0	Clear To Send (CTS) is true when 0.
	(SW2-x)	1–3	Same as above for SW2-5 through SW2-3.
		5,7	Same as above for SW2-2 and SW-2-1.
$C088+s0	TDREG	0–7	ACIA transmit register (write).
	RDREG	0–7	ACIA receive register (read).
$C089+s0	STATUS		ACIA status/reset register.
		0	Parity error detected when 1.
		1	Framing error detected when 1.
		2	Overrun detected when 1.
		3	ACIA receive register full when 1.
		4	ACIA transmit register empty when 1.
		5	Data Carrier Detect (DCD) true when 0.
		6	Data Set Ready (DSR) true when 0.
		7	Interrupt (IRQ) has occurred when 1.
$C08A+s0	COMMAND		ACIA command register (read/write).
		0	Data Terminal Ready (DTR): enable (1) or disable (0) receiver and all interrupts.
		1	When 1, allow STATUS bit 3 to cause interrupt.
		2–3	Control transmit interrupt, Request To Send (RTS) level, and transmitter.
		4	When 0, normal mode for receiver; when 1, echo mode (but bits 2 and 3 must be 0) .
		5–7	Control parity.

Table H-10 (continued)
Address register bits interpretation

Address	Register	Bits	Interpretation
$C08B+s0	CONTROL		ACIA control register (read/write).
		0–3	Baud rate: $00 = 16 times external clock; see Table H-1.
		4	When 1, use baud rate generator; when 0, use external clock (not supported).
		5–6	Number of data bits: 8 (bit 5 and 6 = 0) 7 (5 = 1, 6 = 0), 6 (5 = 0, 6 = 1) or 5 (bit 5 and 6 both = 1).
		7	Number of stop bits: 1 if bit 7= 0; if bit 7 = 1, then 1-1/2 (with 5 data bits, no parity), 1 (8 data plus parity), or 2

Scratchpad RAM locations

The SSC uses the scratchpad RAM locations listed in Table H-11.

Table H-11
Scratchpad RAM locations used by the SSC

Address	Field name	Bit	Interpretation
$0478+s	DELAYFLG	0–1	Form feed delay selection.
		2–3	Line feed delay selection.
		4–5	Carriage return delay selection.
		6–7	Translate option.
$04F8+s	PARAMETE	0-7	Accumulator for firmware's command processor.
$0578+s	STATEFLG	0–2	Command mode when not 0.
		3–5	Slot to chain to (communications mode).
		6	Set to 1 after lowercase input character.
		7	Terminal mode when 1 (communications mode).
		7	Enable CR generation when 1 (printer mode).

Table H-11 (continued)
Scratchpad RAM locations used by the SSC

Address	Field name	Bit	Interpretation
$05F8+s	CMDBYTE	0–6	Printer mode default is Control-I; communications mode default is Control-A.
		7	Set to 1 to Zap control commands.
$0678+s	STSBYTE		Status and IORESULT byte.
$06F8+s	CHNBYTE	0–2	Current screen slot (communication mode); when slot = 0, chaining is enabled.
		3–7	$Cs00 space entry point (communications mode).
	PWDBYTE	0–7	Current printer width; for listing compensation, auto-CR (printer mode).
$0778+s	BUFBYTE	0–6	One-byte input buffer (communications mode); used in conjunction with XOFF recognition.
		7	Set to 1 when buffer full (communications mode).
	COLBYTE	0–7	Current-column counter for tabbing and so forth (printer mode).
$07F8+s	MISCFLG	0	Generate line feed after CR when 1.
		1	Printer mode when 0; communications mode when 1.
		2	Keyboard input enabled when 1.
		3	Control-S (XOFF), Control-R, and Control-T input checking when 1.
		4	Pascal operating system when 1; BASIC when 0
		5	Discard line feed input when 1.
		6	Enable lowercase and special-character generation when 1 (communications mode).
		6	Tabbing option on when 1 (printer mode).
		7	Echo output to Apple IIe screen when 1.

Appendix I

International Versions

International versions of the Apple IIe have two sets of keyboard characters their users may choose between. One set, known as the *USA character set,* is the standard Apple IIe character set described in Chapter 2 of this manual. The other set, known as the *alternate character set,* is a special set of characters designed to meet the needs of various international users. This appendix describes the layout of the various international keyboards when the alternate character set has been selected. A layout drawing and a table of character codes generated by the keyboard are provided for each version described in this appendix. You should note, however, that only the ASCII codes that are different from those in the USA set are defined in the tables; where a keyboard does not generate any different codes, no table is provided. Figure I-1 is a schematic diagram of the international circuit board.

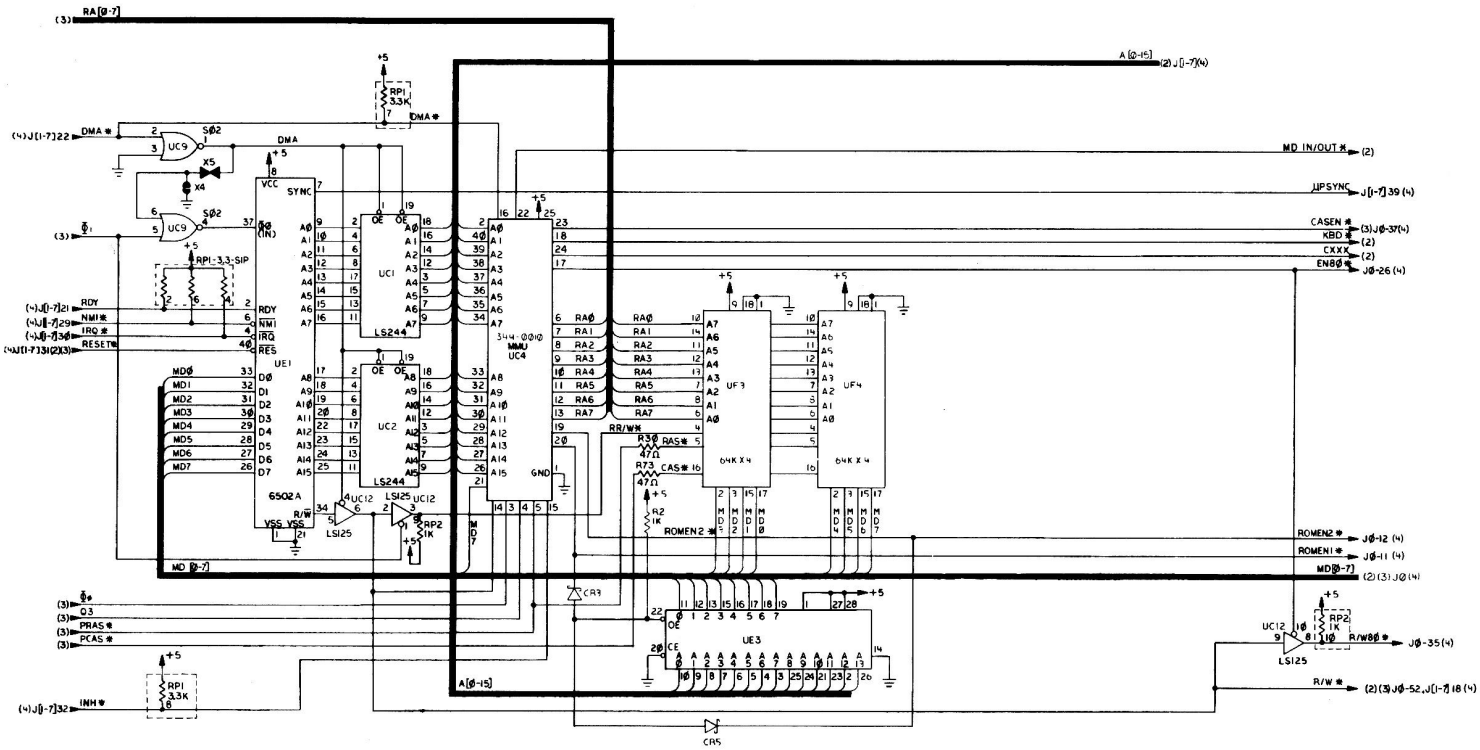

Figure I-1a
International IIe schematic diagram, part 1

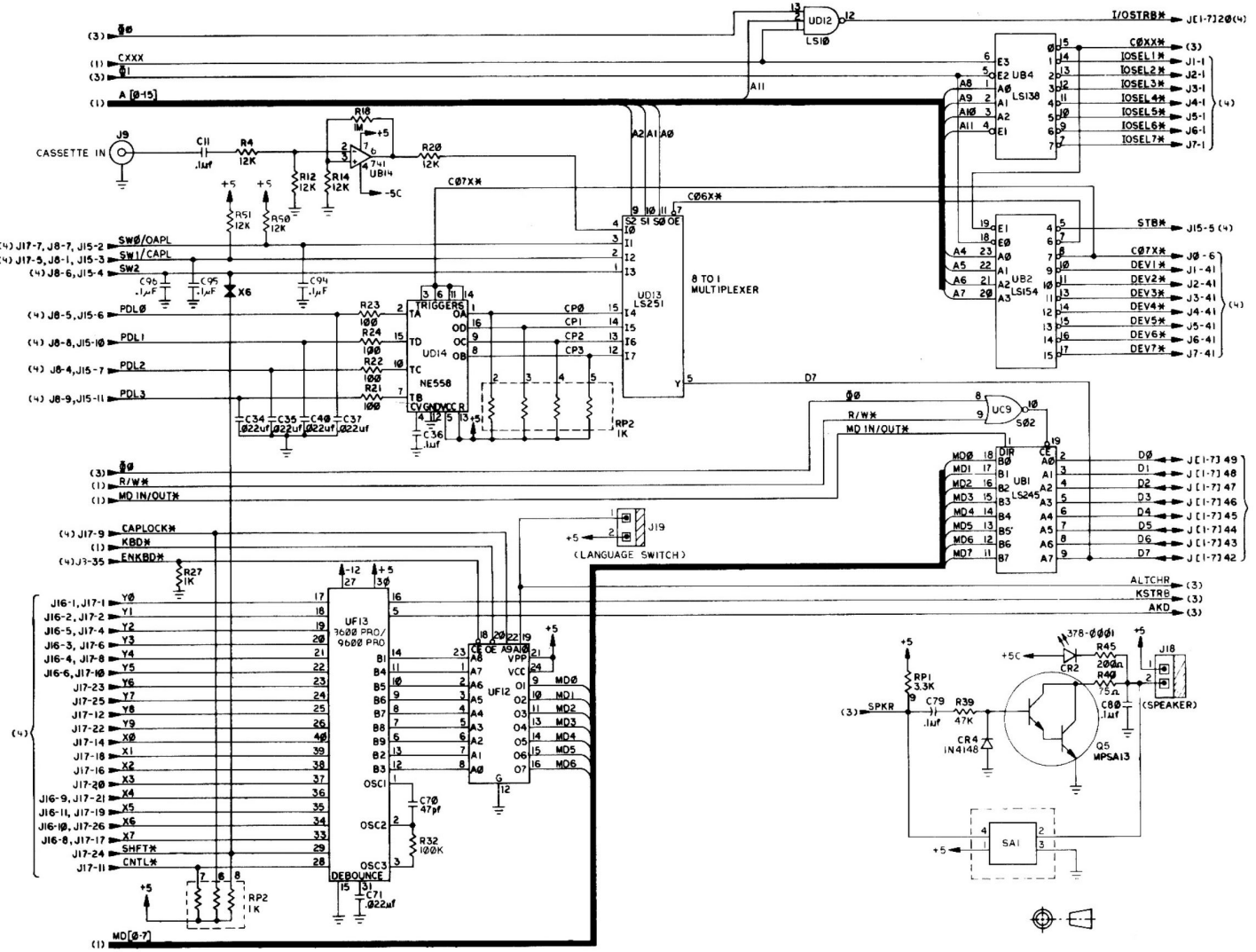

Figure I-1b
International IIe schematic diagram, part 2

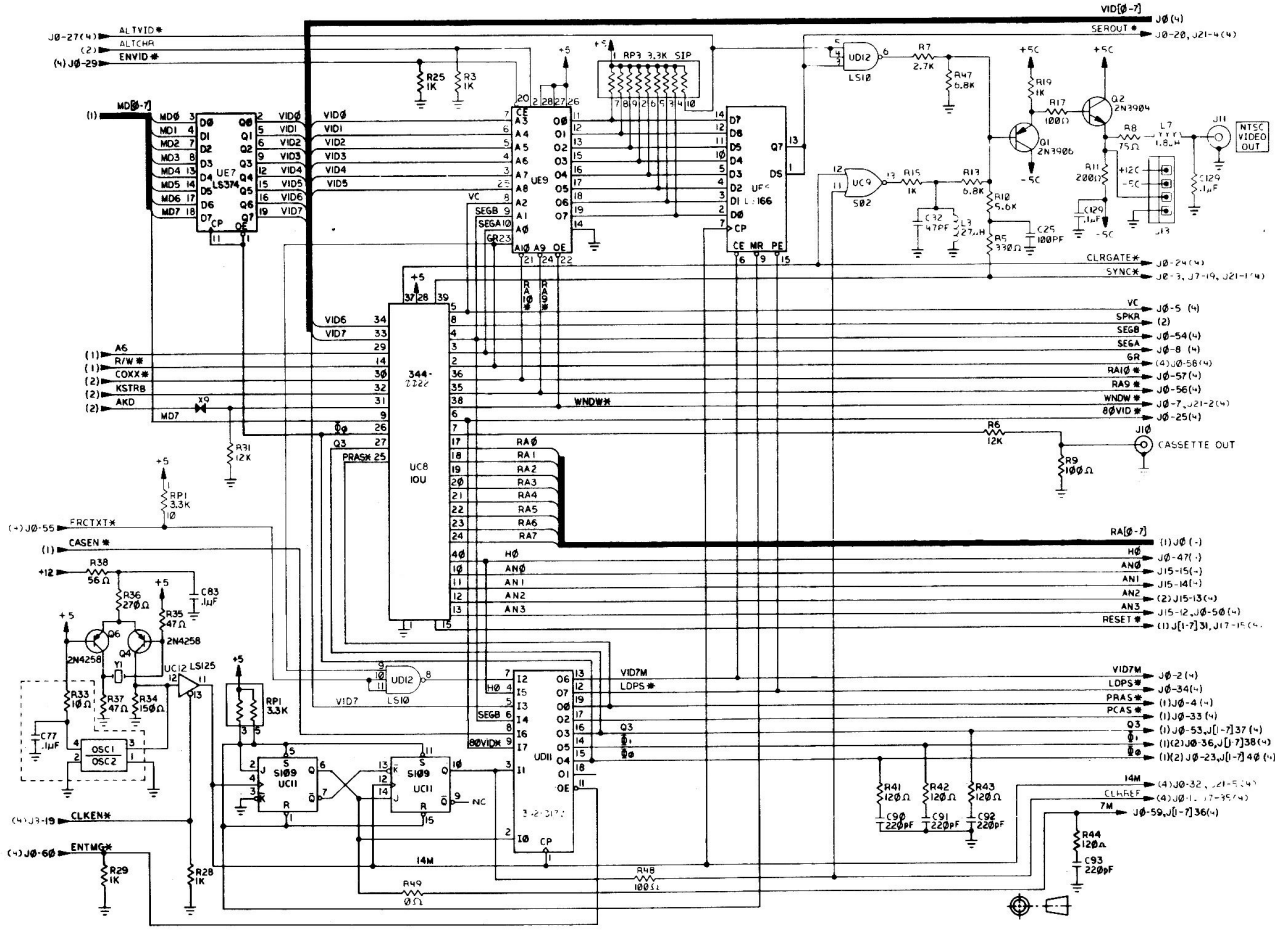

Figure I-1c
International IIe schematic diagram, part 3

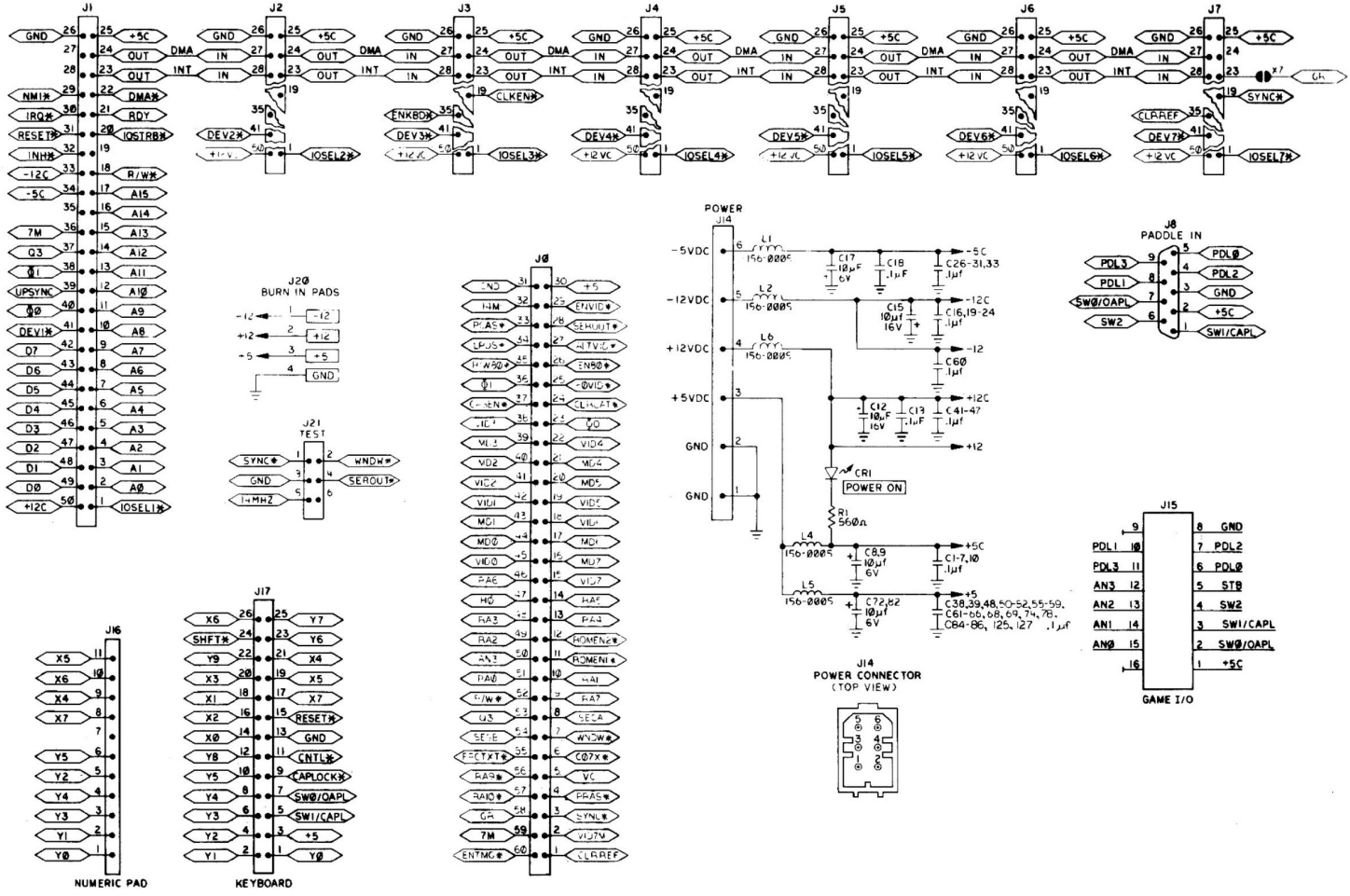

Figure I-1d
International IIe schematic diagram, part 4

The English keyboard

Figure I-2 shows the English keyboard layout. The English character set generates only one character that is different from the USA character set: the £ character replaces the # character.

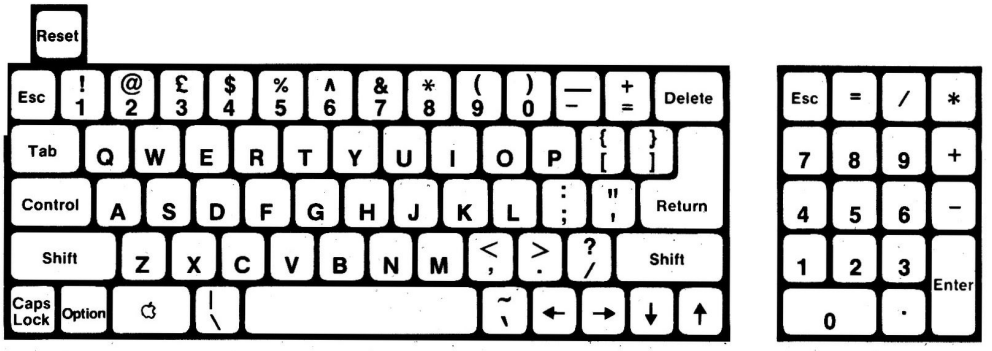

Figure I-2
English keyboard

Table I-1
English keyboard ASCII codes

	Normal		Control		Shift		Both	
Key	**Code**	**Char**	**Code**	**Char**	**Code**	**Char**	**Code**	**Char**
3£	33	3	33	3	23	£	23	#

The French keyboard

The French keyboard layout is shown in Figure I-3. Table I-2 lists the ASCII codes for the French character set that are different from those in the USA character set.

On the French keyboard, the Caps Lock key affects all keys. Pressing the Shift key while the Caps Lock key is engaged "unshifts" to lowercase, but only so long as the Shift key is held down.

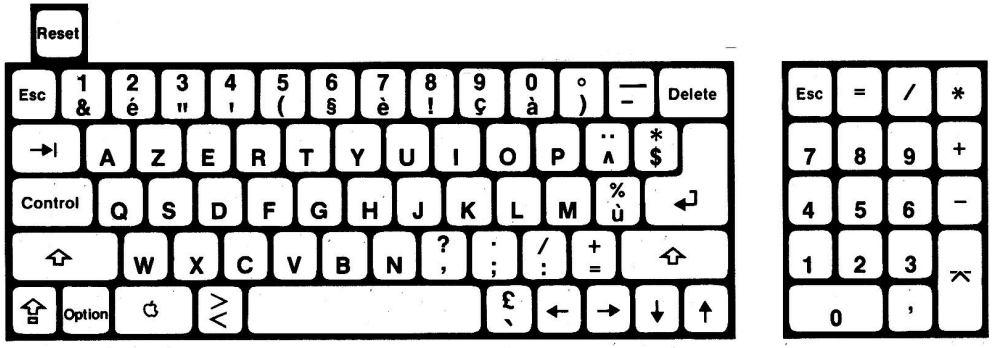

Figure I-3
French keyboard

Table I-2
French keyboard ASCII codes

	Normal		Control		Shift		Both	
Key	Code	Char	Code	Char	Code	Char	Code	Char
&1	26	&	26	&	31	1	31	1
é2	7B	e	7B	e	32	2	32	2
"3	22	"	22	"	33	3	33	3
'4	27	'	27	'	34	4	34	4
(5	28	(	28	(	35	5	35	5
§6	5D	§	1D	GS	36	6	1D	GS
è7	7D	è	7D	è	37	7	37	7
!8	21	!	21	!	38	8	38	8
ç9	5C	ç	1C	FS	39	9	39	FS
à0	40	à	00	NUL	30	0	00	NUL
)°	29	)	1B	ESC	5B	°	1B	ESC
^~	5E	^	1E	RS	7E	~	1E	RS
$*	24	$	24	$	2A	*	2A	*
ù%	7C	ù	7C	ù	25	%	25	%
`£	60	`	60	`	23	£	23	£
,?	2C	,	2C	,	3F	?	3F	?
;.	3B	;	3B	;	2E	.	2E	.
:/	3A	:	3A	:	2F	/	2F	/

The Canadian keyboard

The Canadian keyboard layout is shown in Figure I-4. Table I-3 lists the ASCII codes for the Canadian character set that are different from those in the USA character set.

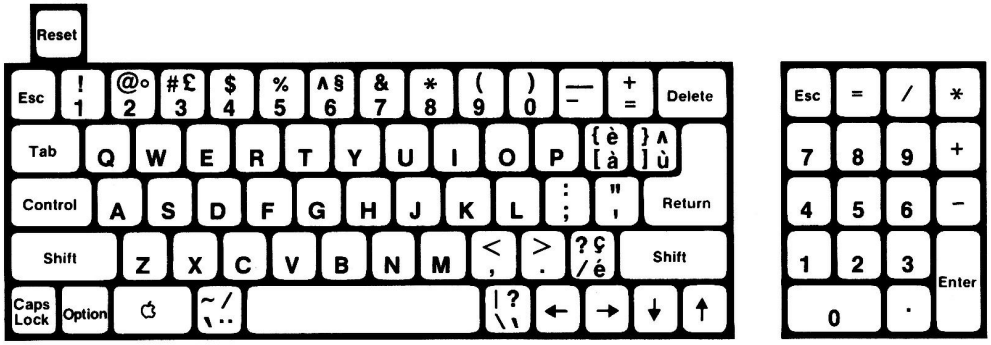

Figure I-4
Canadian keyboard

Table I-3
Canadian keyboard ASCII codes

	Normal		Control		Shift		Both	
Key	**Code**	**Char**	**Code**	**Char**	**Code**	**Char**	**Code**	**Char**
2°	32	2	00	NUL	5B	°	00	NUL
3£	33	3	33	3	23	£	23	£
6§	36	6	1E	RS	5D	§	1E	RS
àé	40	à	7F	DEL	7D	é	7F	DEL
ù^	7C	ù	7C	ù	5E	^	5E	^
èç	7B	è	1C	FS	5C	ç	1C	FS
"/	7E	"	7E	"	2F	/	2F	/

The German keyboard

The German keyboard layout is shown in Figure I-5. Table I-4 lists the ASCII codes for the German character set that are different from those in the USA character set.

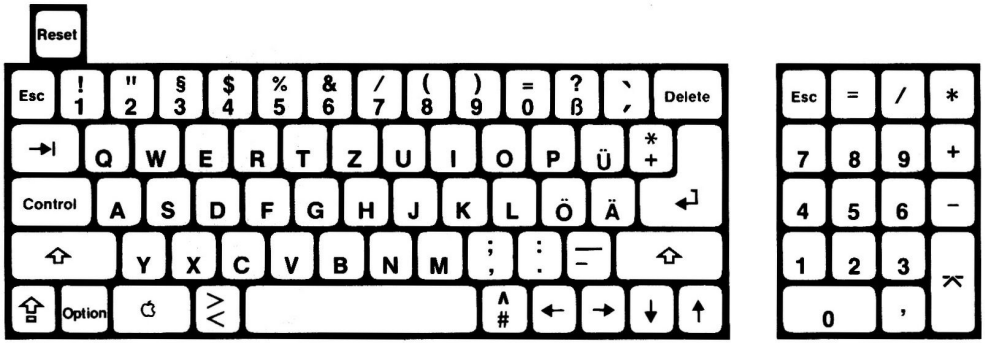

Figure I-5
German keyboard

Table I-4
German keyboard ASCII codes

	Normal		Control		Shift		Both	
Key	**Code**	**Char**	**Code**	**Char**	**Code**	**Char**	**Code**	**Char**
2°	32	2	32	2	22	°	22	°
3§	33	3	00	NUL	40	§	00	NUL
6&	36	6	36	6	26	&	26	&
7/	37	7	37	7	2F	/	2F	/
8(	38	8	38	8	28	(	28	(
9)	39	9	39	9	29	)	29	)
0=	30	0	30	0	3D	=	3D	=
ß?	7E	ß	7E	ß	3F	?	3F	?
Ü	7D	Ü	1D	GS	5D	Ü	1D	GS
+*	2B	+	2B	+	2A	*	2A	*
Ö	7C	Ö	1C	FS	5C	Ö	1C	FS
Ä	7B	Ä	1B	ESC	5B	Ä	1B	ESC
#^	23	#	1E	RS	5E	~	1E	RS
<>	3C	<	3C	<	3E	>	3E	>
,;	2C	,	2C	,	3B	;	3B	;
.:	2E	.	2E	.	3A	:	3A	:

The Italian keyboard

The Italian keyboard layout is shown in Figure I-6. Table I-5 lists the ASCII codes for the Italian character set that are different from those in the USA character set.

On the Italian keyboard, the Caps Lock key affects all keys. Pressing the Shift key while the Caps Lock key is engaged "unshifts" to lowercase, but only so long as the Shift key is held down.

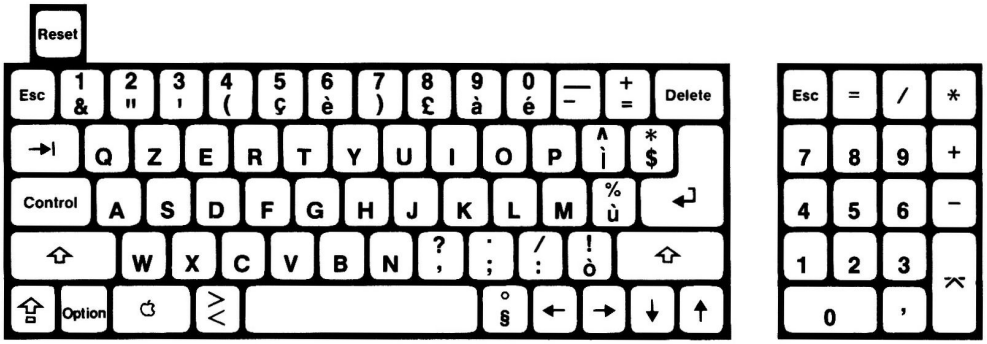

Figure I-6
Italian keyboard

Table I-5
Italian keyboard ASCII codes

	Normal		Control		Shift		Both	
Key	**Code**	**Char**	**Code**	**Char**	**Code**	**Char**	**Code**	**Char**
&1	26	&	26	&	31	1	31	1
"2	22	"	22	"	32	2	32	2
'3	27	'	27	'	33	3	33	3
(4	28	(	28	(	34	4	34	4
ç5	5C	ç	1C	FS	35	5	1C	FS
è6	7D	é	7D	é	36	6	36	6
)7	29	)	29	)	37	7	37	7
£8	23	£	23	£	38	8	38	8
à9	7B	à	7B	à	39	9	39	9
é0	5D	é	1D	GS	30	0	1D	GS
ì^	7E	ì	1E	RS	5E	^	1E	RS
$*	24	$	24	$	2A	*	2A	*
ù%	60	ù	60	ù	25	%	25	%
§°	40	§	00	NUL	5B	°	1B	ESC
<>	3C	<	3C	<	3E	>	3E	>
,?	2C	,	2C	,	3F	?	3F	?
;.	3B	;	3B	;	2E	.	2E	.
:/	3A	:	3A	:	2F	/	2F	/
ò!	7C	ò	7C	ò	21	!	21	!

The Western Spanish keyboard

The Western Spanish keyboard layout is shown in Figure I-7.
Table I-6 lists the ASCII codes for the Spanish character set that are different from those in the USA character set.

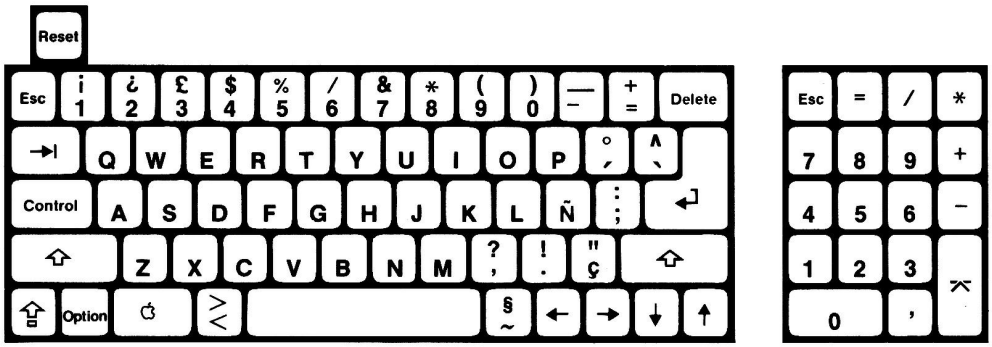

Figure I-7
Western Spanish keyboard

Table I-6
Western Spanish keyboard ASCII codes

	Normal		Control		Shift		Both	
Key	**Code**	**Char**	**Code**	**Char**	**Code**	**Char**	**Code**	**Char**
1¡	31	1	31	1	5B	¡	5B	¡
2¿	32	2	32	2	5D	¿	5D	¿
3£	33	3	33	3	23	£	23	£
6/	36	6	36	6	2F	/	2F	/
´°	27	´	27	´	7B	°	7B	°
~§	7E	~	7F	DEL	40	§	7F	DEL
Ñ	7C	ñ	1C	FS	5C	Ñ	1C	FS
,?	2C	,	2C	,	3F	?	3F	?
.!	2E	.	2E	.	21	!	21	!
ç"	7D	ç	1D	GS	22	"	1D	GS
<>	3C	<	1E	RS	3E	>	1E	RS

The Swedish keyboard

The Swedish keyboard layout is shown in Figure I-8. Table I-7 lists the ASCII codes for the Swedish character set that are different from those in the USA character set.



Figure I-8
Swedish keyboard

Table I-7
Swedish keyboard ASCII codes

	Normal		Control		Shift		Both	
Key	**Code**	**Char**	**Code**	**Char**	**Code**	**Char**	**Code**	**Char**
2"	22	"	32	2	22	"	32	2
6&	36	6	36	6	26	&	26	&
7/	37	7	37	7	2F	/	2F	/
8(	38	8	38	8	28	(	28	(
0=	30	0	30	0	3D	=	3D	=
+?	2B	+	2B	+	3F	?	3F	?
´`	27	´	27	´	60	`	60	`
åÅ	7D	å	1D	GS	5D	Å	1D	GS
~^	7E	~	1E	RS	5E	^	1E	RS
@*	40	@	00	NUL	2A	*	00	NUL
öÖ	7C	ö	1C	FS	5C	Ö	1C	FS
äÄ	7B	ä	1B	ESC	5B	Ä	1B	ESC
,;	2C	,	2C	,	3B	;	3B	;
.:	2E	.	2E	.	3A	:	3A	:
_—	2D	_	1F	US	5F	—	1F	US
<>	3C	<	3C	<	3E	>	3E	>

Certification

In countries where it is applicable, the following product safety certification supplements the USA FCC Class B notice printed on the inside front cover of this manual.

Product safety

This product is designed to meet the requirements of IEC 380, Safety of Electrically Energized Office Machines.

Grounding notice

This product is intended to be electrically grounded. This product is equipped with a power supply plug having a third prong called a ground prong. This plug will only fit into a grounding-type AC outlet. This is a safety feature.

If you are unable to insert the power supply plug into the outlet, contact a licensed electrician to replace the outlet and, if necessary, install a ground.

Do not defeat the purpose of the grounding-type plug.

Power supply specifications

The basic specifications for the international version of the Apple IIe are provided in Table I-8.

Table I-8
International power supply specifications

Line voltage	170 to 270 VAC, 50Hz
Max. input power consumption	70W
Supply voltages	+12 VDC @ 2.5 A –12 VDC @ .25 A +5 VDC @ 2.5 A –5 VDC @ .25 A

Appendix J

Monitor Firmware Listing

```
00:       0000    1 TEST    EQU  0          :REAL VERSION

0000:              2         LST  ON         ;DO LISTING AND SYMBOL TABLES
0000:              3         MSB  ON         ;SET THEM HIBITS
0000:       0001   4 IROTEST EQU  1
0000:       0000   5         DO   TEST
 S                 6 F8ORG   EQU  $1800
 S                 7 C1ORG   EQU  $2100
 S                 8 C3ORG   EQU  $2300
 S                 9 C8ORG   EQU  $2800
0000:             10         ELSE
0000:       F800  11 F8ORG   EQU  $F800
0000:       C100  12 C1ORG   EQU  $C100
0000:       C300  13 C3ORG   EQU  $C300
0000:       C800  14 C8ORG   EQU  $C800
0000:             15         FIN
0000:             16         MSB  ON
0000:             17         INCLUDE EQUATES
0000:              1 ****************************************
0000:              2 *
0000:              3 * Apple //e Video Firmware
0000:              4 *
0000:              5 * RICK AURICCHIO 08/81
0000:              6 * E. BEERNINK, R. WILLIAMS 1984
0000:              7 *
0000:              8 * (C) 1981,1984  APPLE COMPUTER INC.
0000:              9 *     ALL RIGHTS RESERVED
0000:             10 *
0000:             11 ****************************************
0000:             12 *
0000:       0006  13 GOODF8  EQU  6          ;F8 ROM VERSION
0000:             14 *
0000:             15 * HARDWARE EQUATES:
0000:             16 *
0000:       C000  17 KBD     EQU  $C000      ;Read keyboard
0000:       C000  18 CLR80COL EQU $C000      ;Disable 80 column store
0000:       C001  19 SET80COL EQU $C001      ;Enable 80 column store
0000:       C002  20 RDMAINRAM EQU $C002     ;Read from main RAM
0000:       C003  21 RDCARDRAM EQU $C003     ;Read from auxiliary RAM
0000:       C004  22 WRMAINRAM EQU $C004     ;Write to main RAM
0000:       C005  23 WRCARDRAM EQU $C005     ;Write to auxiliary RAM
0000:       C006  24 SETSLOTCXROM EQU $C006  ;Switch in slot CX00 ROM
0000:       C007  25 SETINTCXROM EQU $C007   ;Switch in internal CX00 ROM
0000:       C008  26 SETSTDZP EQU $C008      ;Switch in main stack/zp/lang.card
0000:       C009  27 SETALTZP EQU $C009      ;Switch in aux stack/zp/lang.card
0000:       C00A  28 SETINTC3ROM EQU $C00A   ;Switch in internal $C3 ROM
0000:       C00B  29 SETSLOTC3ROM EQU $C00B  ;Switch in slot $C3 space
0000:       C00C  30 CLR80VID EQU $C00C      ;Disable 80 column video
0000:       C00D  31 SET80VID EQU $C00D      ;Enable 80 column video
0000:       C00E  32 CLRALTCHAR EQU $C00E    ;Normal Apple II char set
0000:       C00F  33 SETALTCHAR EQU $C00F    ;Norm/inv LC, no flash
0000:       C010  34 KBDSTRB EQU  $C010      ;Clear keyboard strobe
0000:       C011  35 RDLCBNK2 EQU $C011      ;>127 if LC BANK2 in use
0000:       C012  36 RDLCRAM EQU  $C012      ;>127 if LC is read enabled

0000:       C013  37 RDRAMRD EQU  $C013      ;>127 if main RAM read enabled
0000:       C014  38 RDRAMWRT EQU $C014      ;>127 if main RAM write enabled
0000:       C015  39 RDCXROM EQU  $C015      ;>127 if ROM CX space enabled
0000:       C016  40 RDALTZP EQU  $C016      ;>127 if alt. zp & lc enabled
0000:       C017  41 RDC3ROM EQU  $C017      ;>127 if slot C3 space enabled
0000:       C018  42 RD80COL EQU  $C018      ;>127 if 80 column store enabled
0000:       C019  43 RDVBLBAR EQU $C019      ;>127 if not vertical blanking
0000:       C01A  44 RDTEXT  EQU  $C01A      ;>127 if text mode
0000:       C01C  45 RDPAGE2 EQU  $C01C      ;>127 if page 2
0000:       C01E  46 ALTCHARSET EQU $C01E    ;>127 if alt char set switched in
0000:       C01F  47 RD80VID EQU  $C01F      ;>127 if 80 column video enabled
0000:       C030  48 SPKR    EQU  $C030      ;toggle speaker
0000:       C054  49 TXTPAGE1 EQU $C054      ;switches in text page 1
0000:       C055  50 TXTPAGE2 EQU $C055      ;switches in text page 2
0000:       C05D  51 CLRAN2  EQU  $C05D      ;annunciator 2
0000:       C05F  52 CLRAN3  EQU  $C05F      ;annunciator 3
0000:       C061  53 BUTN0   EQU  $C061      ;open-apple key
0000:       C062  54 BUTN1   EQU  $C062      ;closed-apple key
0000:       C081  55 ROMIN   EQU  $C081      ;swap in D000-FFFF ROM
0000:       C083  56 LCBANK2 EQU  $C083      ;swap in LC bank 2
0000:       C08B  57 LCBANK1 EQU  $C08B      ;swap in LC bank 1
0000:             58 *
0000:             59 * MONITOR EQUATES:
0000:             60 *
0000:       FBB3  61 F8VERSION EQU F8ORG+$3B3 ;F8 ROM ID
0000:       FD1B  62 KEYIN   EQU  F8ORG+$51B ;normal input
0000:       FDF0  63 COUT1   EQU  F8ORG+$5F0 ;normal output
0000:       FF69  64 MONZ    EQU  F8ORG+$769 ;monitor entry point
0000:             65 *
0000:             66 * ZEROPAGE EQUATES:
0000:             67 *
0000:       0000  68 LOC0    EQU  0          ;used for doing PR#
0000:       0001  69 LOC1    EQU  1          ;used for doing PR#
0000:             70         DSECT
0020:       0020  71         ORG  $20
0020:       0001  72 WNDLFT  DS   1          ;scrolling window left
0021:       0001  73 WNDWDTH DS   1          ;scrolling window width
0022:       0001  74 WNDTOP  DS   1          ;scrolling window top
0023:       0001  75 WNDBTM  DS   1          ;scrolling window bottom+1
0024:       0001  76 CH      DS   1          ;cursor horizontal
0025:       0001  77 CV      DS   1          ;cursor vertical
0026:       0002  78         DS   2          ;GBASL,GBASH
0028:       0002  79 BASL    DS   2          ;points to current line of text
002A:       0029  80 BASH    EQU  BASL+1
002A:       0002  81 BAS2L   DS   2          ;pointer used for scroll
002C:       002B  82 BAS2H   EQU  BAS2L+1
002C:             83 *
002F:       002F  84         ORG  $2F
002F:       0001  85 LENGTH  DS   1          ;length for mnemonics
0030:       0002  86         DS   2
0032:       0001  87 INVFLG  DS   1          ;>127=normal, <127=inverse
0033:       0001  88 PROMPT  DS   1          ;used by monitor upshift
0034:       0001  89 YSAV    DS   1          ;input buffer index for mini
0035:       0001  90 SAVY1   DS   1          ;for restoring Y
```

```
0036:  0002   91 CSWL    DS   2          ;hook for output routine
0038:  0037   92 CSWH    EQU  CSWL+1
0038:  0002   93 KSWL    DS   2          ;hook for input routine
003A:  0039   94 KSWH    EQU  KSWL+1
003C:  003C   95         ORG  $3C
003C:  0002   96 A1L     DS   2          ;Monitor temps for MOVE
003E:  003D   97 A1H     EQU  A1L+1
003E:  0002   98 A2L     DS   2
0040:  003F   99 A2H     EQU  A2L+1
0040:  0002  100         DS   2          ;A3 NOT USED
0042:  0002  101 A4L     DS   2
0044:  0043  102 A4H     EQU  A4L+1
0044:  0001  103 MACSTAT DS   1          ;machine state on breaks
004E:  004E  104         ORG  $4E
004E:  0002  105 RNDL    DS   2          ;random number seed
0050:  004F  106 RNDH    EQU  RNDL+1
0000:        107         DEND
0000:        108 *
0000:  0200  109 BUF     EQU  $200       ;input buffer
0000:        110 * Permanent data in screenholes
0000:        111 *
0000:        112 * Note: these screenholes are only used by
0000:        113 * the 80 column firmware if an 80 column card
0000:        114 * is detected or if the user explicitly activates
0000:        115 * the firmware.  If the 80 column card is not
0000:        116 * present, only MODE is trashed on RESET.
0000:        117 *
0000:        118 * The success of these routines rely on the
0000:        119 * fact that if 80 column store is on (as it
0000:        120 * normally is during 80 column operation), that
0000:        121 * text page 1 is switched in.  Do not call the
0000:        122 * video firmware if video page 2 is switched in!!
0000:        123 *
0000:  07F8  124 MSLOT   EQU  $7F8       ;=$Cn ;n=slot using $C800
0000:        125 *
0000:  047B  126 OLDCH   EQU  $478+3     ;LAST CH used by video firmware
0000:  04FB  127 MODE    EQU  $4F8+3     ;video firmware operating mode
0000:  057B  128 OURCH   EQU  $578+3     ;80 column CH
0000:  05FB  129 OURCV   EQU  $5F8+3     ;80 column CV
0000:  067B  130 CHAR    EQU  $678+3     ;character to be printed/read
0000:  06FB  131 XCOORD  EQU  $6F8+3     ;GOTOXY X-coord (pascal only)
0000:  077B  132 TEMP1   EQU  $778+3     ;temp
0000:  077B  133 OLDBASL EQU  $778+3     ;last BASL (pascal only)
0000:  07FB  134 TEMP2   EQU  $7F8+3     ;temp
0000:  07FB  135 OLDBASH EQU  $7F8+3     ;last BASH (pascal only)
0000:        136 *
0000:        137 * BASIC MODE BITS
0000:        138 *
0000:        139 * 0....... - BASIC active
0000:        140 * 1....... - Pascal active
0000:        141 * .0...... -
0000:        142 * .1...... -
0000:        143 * ..0..... - Print control characters
0000:        144 * ..1..... - Don't print ctrl chars.
0000:        145 * ...0.... -
0000:        146 * ...1.... -
0000:        147 * ....0... - Print control characters
0000:        148 * ....1... - Don't print next ctrl char
0000:        149 * .....0.. -
0000:        150 * .....1.. -
0000:        151 * ......0. -
0000:        152 * ......1. -
0000:        153 * .......0 - Mouse text inactive
0000:        154 * .......1 - Mouse text active
0000:        155 *
0000:  0040  156 M.6     EQU  $40
0000:  0020  157 M.CTL2  EQU  $20        ;Don't print controls
0000:  0010  158 M.4     EQU  $10
0000:  0008  159 M.CTL   EQU  $08        ;Temp ctrl disable
0000:  0004  160 M.2     EQU  $04
0000:  0002  161 M.1     EQU  $02
0000:  0001  162 M.MOUSE EQU  $01
0000:        163 *
0000:        164 * Pascal Mode Bits
0000:        165 *
0000:        166 * 0....... - BASIC active
0000:        167 * 1....... - Pascal active
0000:        168 * .0...... -
0000:        169 * .1...... -
0000:        170 * ..0..... -
0000:        171 * ..1..... -
0000:        172 * ...0.... - Cursor always on
0000:        173 * ...1.... - Cursor always off
0000:        174 * ....0... - GOTOXY n/a
0000:        175 * ....1... - GOTOXY in progress
0000:        176 * .....0.. - Normal Video
0000:        177 * .....1.. - Inverse Video
0000:        178 * ......0. - PASCAL 1.1 F/W ACTIVE
0000:        179 * ......1. - PASCAL 1.0 INTERFACE
0000:        180 * .......0 - Mouse text inactive
0000:        181 * .......1 - Mouse text active
0000:        182 *
0000:  0080  183 M.PASCAL EQU $80        ;Pascal active
0000:  0010  184 M.CURSOR EQU $10        ;Don't print cursor
0000:  0008  185 M.GOXY   EQU $08        ;GOTOXY IN PROGRESS
0000:  0004  186 M.VMODE  EQU $04        ;PASCAL VIDEO MODE
0000:  0002  187 M.PAS1.0 EQU $02        ;PASCAL 1.0 MODE
0000:        188 *
0000:        189 * F8 ROM entries
0000:        190 *
0000:  FA47  191 NEWBREAK EQU F8ORG+$247
0000:  FC74  192 IRQUSER EQU  F8ORG+$474
0000:  FC7A  193 IRQDONE2 EQU F8ORG+$47A
0000:  F8B7  194 TSTROM  EQU  F8ORG+$B7
0000:          18         INCLUDE BFUNC
----- NEXT OBJECT FILE NAME IS REFLIST.0
C100:  C100    1         ORG  C1ORG
C100:  C100    2 BFUNCPG EQU  *
```

```
C100:          FEC5     3 FUNCEXIT EQU F8ORG+$6C5 ;RETURN ADDRESS
C100:          FCF0     4 MINI     EQU  F8ORG+$4F0
C100:                   5 *
C100:                   6 * BASIC FUNCTION HOOK:
C100:                   7 *
C100:                   8 * $C100 is called by the patched $F8 ROM.
C100:                   9 * It provides an extension to $F8 routines
C100:                  10 * that do not work in 80 columns.
C100:                  11 *
C100:                  12 * Before jumping here, the $F8 rom disabled
C100:                  13 * slot I/O and enabled ROM I/O.  This makes
C100:                  14 * the entire space from $C100 - $CFFF with the
C100:                  15 * exception of the $C300 page available.
C100:                  16 *
C100:                  17 * On exit slot I/O is restored if necessary.
C100:                  18 *
C100:                  19 * INPUT: Y=FUNCTION AS FOLLOWS:
C100:                  20 *
C100:                  21 *           1 = KEYIN
C100:                  22 *           2 = Fix escape char
C100:                  23 *           3 = BASCALC
C100:                  24 *           4 = VTAB or VTABZ
C100:                  25 *           5 = HOME
C100:                  26 *           6 = SCROLL
C100:                  27 *           7 = CLREOL
C100:                  28 *           8 = CLREOLZ
C100:                  29 *           9 = RESET
C100:                  30 *           A = CLREOP
C100:                  31 *           B = RDKEY
C100:                  32 *           C = SETWND
C100:                  33 *           D = Mini Assembler
C100:                  34 *           E = set 40 columns on PR#0/IN#0
C100:                  35 *           F = Fix pick for monitor
C100:                  36 *
C100:                  37 *  Stack has PHP for status of internal $CN00 ROM
C100:                  38 *
C100:                  39 * Note: If 80 Vid is on and the MODE byte is valid,
C100:                  40 * this call will be dispatched to an 80 column routine
C100:                  41 * by B.FUNCO.  Otherwise it will be dispatched to a
C100:                  42 * 40 column routine by B.OLDFUNC.  In all cases return
C100:                  43 * to the Autostart ROM is done through F.RETURN.
C100:                  44 *
C100:4C 13 C2          45 B.FUNC  JMP  DISPATCH  ;figure out what to do
C103:                  46 *
C103:A4 24             47 F.CLREOP LDY CH        ; ESC F IS CLR TO END OF PAGE
C105:A5 25             48          LDA  CV
C107:48                49 CLEOP1   PHA
C108:20 03 CE          50          JSR  VTABZ
C10B:20 F4 C1          51          JSR  X.CLREOLZ
C10E:A0 00             52          LDY  #$00
C110:68                53          PLA
C111:69 00             54          ADC  #$00      ;(carry set)
C113:C5 23             55          CMP  WNDBTM
C115:90 F0   C107      56          BCC  CLEOP1
C117:B0 34   C14D      57          BCS  GVTZ      ;=>always to VTABZ
C119:                  58 *
C119:A5 22             59 F.HOME  LDA  WNDTOP
C11B:85 25             60         STA  CV
C11D:A0 00             61         LDY  #$00
C11F:84 24             62         STY  CH
C121:F0 E4   C107      63         BEQ  CLEOP1    ;(ALWAYS TAKEN)
C123:                  64 *
C123:A5 22             65 F.SCROLL LDA WNDTOP
C125:48                66         PHA
C126:20 03 CE          67         JSR  VTABZ
C129:A5 28             68 SCRL1   LDA  BASL
C12B:85 2A             69         STA  BAS2L
C12D:A5 29             70         LDA  BASH
C12F:85 2B             71         STA  BAS2H
C131:A4 21             72         LDY  WNDWDTH
C133:88                73         DEY
C134:68                74         PLA
C135:69 01             75         ADC  #$01
C137:C5 23             76         CMP  WNDBTM
C139:B0 0D   C148      77         BCS  SCRL3
C13B:48                78         PHA
C13C:20 03 CE          79         JSR  VTABZ
C13F:B1 28             80 SCRL2   LDA  (BASL),Y
C141:91 2A             81         STA  (BAS2L),Y
C143:88                82         DEY
C144:10 F9   C13F      83         BPL  SCRL2
C146:30 E1   C129      84         BMI  SCRL1
C148:A0 00             85 SCRL3   LDY  #$00
C14A:20 F4 C1          86         JSR  X.CLREOLZ
C14D:A5 25             87 GVTZ    LDA  CV
C14F:4C 03 CE          88 GVTZ2   JMP  VTABZ     ;set vertical base
C152:                  89 *
C152:          C152    90 F.SETWND EQU *
C152:A9 28             91         LDA  #40
C154:85 21             92         STA  WNDWDTH
C156:A9 18             93         LDA  #24
C158:85 23             94         STA  WNDBTM
C15A:A9 17             95         LDA  #23
C15C:85 25             96         STA  CV
C15E:D0 EF   C14F      97         BNE  GVTZ2     ;=>go do vtab, exit
C160:                  98 *
C160:                  99 * Load Y from BAS2L and clear line
C160:                 100 *
C160:A4 2A            101 F.CLREOLZ LDY BAS2L    ;set up by $F8 ROM
C162:4C F4 C1         102         JMP  X.CLREOLZ ;and clear line
C165:                 103 *
C165:                 104 * 80 column routines begin here
C165:                 105 *
C165:4C EB CB         106 B.SCROLL JMP SCROLLUP  ;DO IT FOR CALLER
C168:                 107 *
C168:                 108 * Clear to end of line using Y = OURCH
C168:                 109 *
C168:4C 9A CC         110 B.CLREOL JMP X.GS      ;clear to end of line
```

```
C16B:                   111 *
C16B:                   112 * Clear to end of line using Y = BAS2L
C16B:                   113 * which was set up by the $F8 ROM
C16B:                   114 *
C16B:A4 2A              115 B.CLREOLZ LDY BAS2L     ;get Y
C16D:4C 9D CC           116           JMP  X.GSEOLZ ;clear to end of line
C170:                   117 *
C170:4C 74 CC           118 B.CLREOP JMP X.VT       ;CLEAR TO EOS
C173:4C A0 C2           119 B.SETWND JMP B.SETWNDX
C176:4C B0 C2           120 B.RESET JMP  B.RESETX   ;MUST BE IN BFUNC PAGE
C179:4C F2 C2           121 B.RDKEY JMP  B.RDKEYX
C17C:                   122 *
C17C:20 90 CC           123 B.HOME  JSR  X.FF       ;HOME & CLEAR
C17F:AD 7B 05           124         LDA  OURCH
C182:85 24              125         STA  CH         ;COPY CH/CV FOR CALLER
C184:8D 7B 04           126         STA  OLDCH      ;REMEMBER WHAT WE SET
C187:4C FE CD           127         JMP  VTAB       ;calc base & return
C18A:                   128 *
C18A:                   129 * Complete PR# or IN# call.  Quit video firmware
C18A:                   130 * if PR#0 and it was active (B.QUIT).  Complete call
C18A:                   131 * if inactive (F.QUIT).
C18A:                   132 *
C18A:       C18A        133 B.QUIT  EQU  *
C18A:B4 00              134         LDY  LOC0,X     ;was it PR#0/IN#0?
C18C:F0 0F   C19D       135         BEQ  NOT0       ;=>no, not slot 0
C18E:C0 1B              136         CPY  #KEYIN     ;was it IN#0?
C190:F0 0E   C1A0       137         BEQ  ISO        ;=>yes, update high byte
C192:20 80 CD           138         JSR  QUIT       ;quit the firmware
C195:B4 00              139 F.QUIT  LDY  LOC0,X     ;get low byte into Y
C197:F0 04   C19D       140         BEQ  NOT0       ;not slot 0, firmware inactive
C199:A9 FD              141 F8HOOK  LDA  #<KEYIN    ;set high byte to $FD
C19B:95 01              142         STA  LOC1,X
C19D:B5 01              143 NOT0    LDA  LOC1,X     ;restore accumulator
C19F:60                 144         RTS
C1A0:                   145 *
C1A0:A5 37              146 ISO     LDA  CSWH       ;is $C3 in output hook?
C1A2:C9 C3              147         CMP  #<BASICIN
C1A4:D0 F3   C199       148         BNE  F8HOOK     ;=>no, set to $FD0C
C1A6:4C 32 C8           149         JMP  C3IN       ;else set to $C305, exit A=$C3
C1A9:                   150 *
C1A9:A4 24              151 F.RDKEY LDY  CH         ;else do normal 40 cursor
C1AB:B1 28              152         LDA  (BASL),Y   ;grab the character
C1AD:48                 153         PHA
C1AE:29 3F              154         AND  #$3F       ;set screen to flash
C1B0:09 40              155         ORA  #$40
C1B2:91 28              156         STA  (BASL),Y   ;and display it
C1B4:68                 157 F.NOCUR PLA
C1B5:60                 158         RTS             ;return (A=char)
C1B6:                   159 *
C1B6:A8                 160 F.BASCALC TAY           ;restore Y
C1B7:A5 28              161         LDA  BASL       ;restore A
C1B9:20 BA CA           162         JSR  BASCALC    ;calculate base address
C1BC:90 4C   C20A       163         BCC  F.RETURN   ;BASCALC always returns BCC!
C1BE:                   164 *
```

```
C1BE:       C1BE        165 B.ESCFIX EQU *
C1BE:20 14 CE           166         JSR  UPSHFT     ;upshift lowercase
C1C1:A0 03              167 B.ESCFIX1 LDY #4-1      ;SCAN FOR A MATCH
C1C3:       C1C3        168 B.ESCFIX2 EQU *
C1C3:D9 EE C2           169         CMP  ESCIN,Y    ;IS IT?
C1C6:D0 03   C1CB       170         BNE  B.ESCFIX3  ;=>NAW
C1C8:B9 A4 C9           171         LDA  ESCOUT,Y   ;YES, TRANSLATE IT
C1CB:       C1CB        172 B.ESCFIX3 EQU *
C1CB:88                 173         DEY
C1CC:10 F5   C1C3       174         BPL  B.ESCFIX2
C1CE:30 3A   C20A       175         BMI  F.RETURN   ;RETURN:CHAR IN AC
C1D0:                   176 *
C1D0:20 70 C8           177 F.BOUT  JSR  BOUT       ;print the character
C1D3:4C 0A C2           178         JMP  F.RETURN   ;AND RETURN
C1D6:                   179 *
C1D6:                   180 * Do displaced mnemonic stuff
C1D6:                   181 *
C1D6:8A                 182 MNNDX   TXA             ;get old acc
C1D7:29 03              183         AND  #$03       ;make it a length
C1D9:85 2F              184         STA  LENGTH
C1DB:A5 2A              185         LDA  BAS2L      ;get old Y into A
C1DD:29 8F              186         AND  #$8F
C1DF:4C 71 CA           187         JMP  DOMN       ;and go to open spaces
C1E2:                   188 *
C1E2:20 F0 FC           189 GOMINI  JSR  MINI       ;do mini-assembler
C1E5:8A                 190         TXA             ;X=0. Set mode to 0, and counter
C1E6:85 34              191         STA  YSAV       ;so not CR on new line
C1E8:60                 192         RTS
C1E9:                   193 *
C1E9:                   194 * Pick an 80 column character for the monitor
C1E9:                   195 *
C1E9:AC 7B 05           196 FIXPICK LDY  OURCH      ;get 80 column cursor
C1EC:20 44 CE           197         JSR  PICK       ;pick the character
C1EF:09 80              198         ORA  #$80       ;always pick as normal
C1F1:60                 199         RTS             ;and return
C1F2:                   200 *
C1F2:                   201 * Load CH into Y and clear line
C1F2:                   202 *
C1F2:       C1F2        203 F.CLREOL EQU *
C1F2:A4 24              204 X.CLREOL LDY CH         ;get horizontal position
C1F4:A9 A0              205 X.CLREOLZ LDA #$A0      ;store a normal blank
C1F6:2C 1E C0           206         BIT  ALTCHARSET ;unless alternate char set
C1F9:10 06   C201       207         BPL  X.CLREOL2
C1FB:24 32              208         BIT  INVFLG     ;and inverse
C1FD:30 02   C201       209         BMI  X.CLREOL2
C1FF:A9 20              210         LDA  #$20       ;use inverse blank
C201:4C A8 CC           211 X.CLREOL2 JMP CLR40     ;clear to end of line
C204:                   212 *
C204:                   213 * Call VTAB or VTABZ for 40 or 80 columns.  Acc (CV)
C204:                   214 * is saved in BASL.
C204:                   215 *
C204:A8                 216 F.VTABZ TAY             ;restore Y
C205:A5 28              217         LDA  BASL       ;and A
C207:20 03 CE           218         JSR  VTABZ      ;do VTABZ
```

```
C20A:                  219 *
C20A:                  220 * EXIT. EITHER EXIT WITH OR WITHOUT
C20A:                  221 *  ENABLING I/O SPACE.
C20A:                  222 *
C20A:          C20A    223 F.RETURN EQU *
C20A:28                224          PLP            ;GET PRIOR I/O DISABLE
C20B:30 03     C210    225 F.RET2   BMI  F.RET1    ;=>LEAVE IT DISABLED
C20D:4C C5 FE          226          JMP  FUNCEXIT  ;=>EXIT & ENABLE I/O
C210:4C C8 FE          227 F.RET1   JMP  FUNCEXIT+3 ;EXIT DISABLED
C213:                  228 *
C213:                  229 * Do BOUT, ESCFIX, BASCALC, and KEYIN immediately
C213:                  230 * to avoid destroying Accumulator.
C213:                  231 *
C213:88                232 DISPATCH DEY
C214:30 BA     C1D0    233          BMI  F.BOUT    ;code 0 = 80 column output
C216:88                234          DEY
C217:30 A5     C1BE    235          BMI  B.ESCFIX  ;code 1 = ESCFIX
C219:88                236          DEY
C21A:30 9A     C1B6    237          BMI  F.BASCALC ;code 2 = BASCALC
C21C:88                238          DEY
C21D:30 3D     C25C    239          BMI  B.KEYIN   ;code 3 = KEYIN
C21F:88                240          DEY
C220:30 E2     C204    241          BMI  F.VTABZ   ;code 4 = VTABZ
C222:                  242 *
C222:                  243 * First push address of generic return routine
C222:                  244 *
C222:A9 C2             245          LDA  #<F.RETURN ;return to F.RETURN
C224:48                246          PHA
C225:A9 09             247          LDA  #>F.RETURN-1
C227:48                248          PHA
C228:                  249 *
C228:                  250 * If any of 5 bits in $4FB (MODE) is on, then the mode is not
C228:                  251 * valid for video firmware.  Use old routines.
C228:                  252 *
C228:AD FB 04          253          LDA  MODE      ;no, is mode valid?
C22B:29 D6             254          AND  #M.PASCAL+M.6+M.4+M.2+M.1
C22D:D0 0D     C23C    255          BNE  GETFUNC   ;=>no, use 40 column routines
C22F:98                256          TYA            ;80 column routines in
C230:18                257          CLC            ;2nd half of table
C231:69 0C             258          ADC  #TABLEN
C233:48                259          PHA
C234:20 50 C8          260          JSR  CSETUP    ;set up 80 column cursor
C237:20 FE CD          261          JSR  VTAB      ;calc base
C23A:68                262          PLA
C23B:A8                263          TAY            ;restore Y
C23C:                  264 *
C23C:                  265 * Now push address of routine
C23C:                  266 *
C23C:A9 C1             267 GETFUNC LDA  #<BFUNCPG ;stuff routine address
C23E:48                268          PHA
C23F:B9 44 C2          269          LDA  F.TABLE,Y
C242:48                270          PHA
C243:                  271 *
C243:                  272 * RTS goes to routine on stack.  When the routine
C243:                  273 * does an RTS, it returns to F.RETURN, which restores
C243:                  274 * the INTCXROM status and returns.
C243:                  275 *
C243:60                276          RTS
C244:                  277 *
C244:                  278 * Table of routines to call.  All routines are
C244:                  279 * in the $C100 page. These are low bytes only.
C244:                  280 *
C244:          C244    281 F.TABLE EQU  *
C244:18                282          DFB  #>F.HOME-1 ;(5) 40 column HOME
C245:22                283          DFB  #>F.SCROLL-1 ;(6) 40 column scroll
C246:F1                284          DFB  #>F.CLREOL-1 ;(7) 40 column clear line
C247:5F                285          DFB  #>F.CLREOLZ-1 ;(8) 40 column clear with Y set
C248:75
      286              DFB  #>B.RESET-1 ;(9) 40/80 column reset
C249:02                287          DFB  #>F.CLREOP-1 ;(A) 40 column clear end of page
C24A:A8                288          DFB  #>F.RDKEY-1 ;(B) readkey w/flashing checkerboard
C24B:51                289          DFB  #>F.SETWND-1 ;(C) Set 40 column window
C24C:E1                290          DFB  #>GOMINI-1 ;(D) Mini-assembler
C24D:94                291          DFB  #>F.QUIT-1 ;(E) quit before IN#0,PR#0
C24E:E8                292          DFB  #>FIXPICK-1 ;(F) fix pick for 80 columns
C24F:D5                293          DFB  #>MNNDX-1  ;(10) calc mnemonic index
C250:                  294 *
C250:          000C    295 TABLEN  EQU  *-F.TABLE
C250:                  296 *
C250:7B                297          DFB  #>B.HOME-1 ;(11) 80 column HOME
C251:64                298          DFB  #>B.SCROLL-1 ;(12) 80 column scroll
C252:67                299          DFB  #>B.CLREOL-1 ;(13) 80 column clear line
C253:6A                300          DFB  #>B.CLREOLZ-1 ;(14) 80 column clear with Y set
C254:75                301          DFB  #>B.RESET-1 ;(15) 40/80 column reset
C255:6F                302          DFB  #>B.CLREOP-1 ;(16) 80 column clear end of page
C256:78                303          DFB  #>B.RDKEY-1 ;(17) readkey w/inverse cursor
C257:72                304          DFB  #>B.SETWND-1 ;(18) 40/80 column VTAB
C258:E1                305          DFB  #>GOMINI-1 ;(19) Mini-Assembler
C259:89                306          DFB  #>B.QUIT-1 ;(1A) quit before IN#0,PR#0
C25A:E8                307          DFB  #>FIXPICK-1 ;(1B) fix pick for 80 columns
C25B:D5                308          DFB  #>MNNDX-1  ;(1C) calc mnemonic index
C25C:                  309 *
C25C:          C25C    310 B.KEYIN EQU  *
C25C:2C 1F C0          311          BIT  RD80VID   ;80 columns?
C25F:10 06     C267    312          BPL  B.KEYIN1  ;=>no, flash the cursor
C261:20 74 C8          313          JSR  BIN       ;get a keystroke
C264:4C 0A C2          314 GOF.RET JMP  F.RETURN  ;and return
C267:                  315 *
C267:A8                316 B.KEYIN1 TAY            ;preserve A
C268:8A                317          TXA            ;put X on stack
C269:48                318          PHA
C26A:98                319          TYA            ;restore A
C26B:48                320          PHA            ;save char on stack
C26C:48                321          PHA            ;dummy for cursor/char test
C26D:                  322 *
C26D:68                323 NEW.CUR PLA             ;get last cursor
C26E:C9 FF             324          CMP  #$FF      ;was it checkerboard?
C270:F0 04     C276    325          BEQ  NEW.CUR1  ;=>yes, get old char
```

```
C272:A9 FF        326         LDA  #$FF      ;no, get checkerboard
C274:D0 02  C278  327         BNE  NEW.CUR2  ;=>always
C276:68           328 NEW.CUR1 PLA            ;get character
C277:48           329         PHA            ;into accumulator
C278:48           330 NEW.CUR2 PHA            ;save for next cursor check
C279:A4 24        331         LDY  CH        ;get cursor horizontal
C27B:91 28        332         STA  (BASL),Y  ;and save char/cursor
C27D:             333 *
C27D:             334 * Now leave char/cursor for awhile or
C27D:             335 * until a key is pressed.
C27D:             336 *
C27D:E6 4E        337 WAITKEY1 INC RNDL      ;bump random seed
C27F:D0 0A  C28B  338         BNE  WAITKEY4  ;=>and check keypress
C281:A5 4F        339         LDA  RNDH      ;is it time to blink yet?
C283:E6 4F        340         INC  RNDH
C285:45 4F        341         EOR  RNDH
C287:29 40        342         AND  #$40
C289:D0 E2  C26D  343         BNE  NEW.CUR   ;=>yes, blink it
C28B:AD 00 C0     344 WAITKEY4 LDA KBD       ;Ivories been tickled?
C28E:10 ED  C27D  345         BPL  WAITKEY1  ;no, keep blinking
C290:             346 *
C290:68           347         PLA            ;pop char/cursor
C291:68           348         PLA            ;pop  character
C292:A4 24        349         LDY  CH        ;and display it
C294:91 28        350         STA  (BASL),Y  ;(erase cursor)
C296:68           351         PLA            ;restore X
C297:AA           352         TAX
C298:AD 00 C0     353         LDA  KBD       ;now retrieve the key
C29B:8D 10 C0     354         STA  KBDSTRB   ;clear the strobe
C29E:30 C4  C264  355         BMI  GOF.RET   ;=>exit always
C2A0:             356 *
C2A0:       C2A0  357 B.SETWNDX EQU *
C2A0:20 52 C1     358         JSR  F.SETWND  ;set 40 column width
C2A3:2C 1F C0     359         BIT  RD80VID   ;80 columns?
C2A6:10 02  C2AA  360         BPL  SKPSHFT   ;=>no, width ok
C2A8:06 21        361         ASL  WNDWDTH   ;make it 80
C2AA:A5 25        362 SKPSHFT LDA  CV
C2AC:8D FB 05     363         STA  OURCV     ;update OURCV
C2AF:60           364         RTS
C2B0:             365 *
C2B0:             366 * HANDLE RESET FOR MONITOR:
C2B0:             367 *
C2B0:       C2B0  368 B.RESETX EQU *
C2B0:A9 FF        369         LDA  #$FF      ;DESTROY MODE BYTE
C2B2:8D FB 04     370         STA  MODE
C2B5:AD 5D C0     371         LDA  CLRAN2    ;SETUP
C2B8:AD 5F C0     372         LDA  CLRAN3    ; ANNUNCIATORS
C2BB:             373 *
C2BB:             374 * IF THE OPEN APPLE KEY
C2BB:             375 *  (ALIAS PADDLE BUTTONS 0) IS
C2BB:             376 *  DEPRESSED, COLDSTART THE SYSTEM
C2BB:             377 *  AFTER DESTROYING MEMORY:
C2BB:             378 *
C2BB:AD 62 C0     379         LDA  BUTN1     ;GET BUTTON 1 (SOLID)
C2BE:10 03  C2C3  380         BPL  NODIAGS   ;=>Up, no diags
C2C0:4C 00 C6     381         JMP  DIAGS     ;=>else go do diagnostics
C2C3:AD 61 C0     382 NODIAGS LDA  BUTN0     ;GET BUTTON 0 (OPEN)
C2C6:10 1A  C2E2  383         BPL  RESETRET  ;=>NOT JIVE OR DIAGS
C2C8:             384 *
C2C8:             385 * BLAST 2 BYTES OF EACH PAGE,
C2C8:             386 *  INCLUDING THE RESET VECTOR:
C2C8:             387 *
C2C8:A0 B0        388         LDY  #$B0      ;LET IT PRECESS DOWN
C2CA:A9 00        389         LDA  #0
C2CC:85 3C        390         STA  A1L
C2CE:A9 BF        391         LDA  #$BF      ;START FROM BFXX DOWN
C2D0:38           392         SEC            ;FOR SUBTRACT
C2D1:       C2D1  393 BLAST   EQU  *
C2D1:85 3D        394         STA  A1H
C2D3:48           395         PHA            ;save acc to store
C2D4:A9 A0        396         LDA  #$A0      ;blanks
C2D6:91 3C        397         STA  (A1L),Y
C2D8:88           398         DEY
C2D9:91 3C        399         STA  (A1L),Y
C2DB:68           400         PLA            ;restore acc for counter
C2DC:E9 01        401         SBC  #1        ;BACK DOWN TO NEXT PAGE
C2DE:C9 01        402         CMP  #1        ;STAY AWAY FROM STACK!
C2E0:D0 EF  C2D1  403         BNE  BLAST
C2E2:             404 *
C2E2:             405 * If there is a ROM card plugged into slot 3,
C2E2:             406 * don't switch in the internal ROM C3 space.  If not,
C2E2:             407 * only switch them in if there is a RAM card
C2E2:             408 * in the video slot.
C2E2:             409 *
C2E2:             410 * NOTE: The //e powers up with internal $C3 ROM switched
C2E2:             411 * in.  TSTROMCARD switches it out, RESETRET may or may
C2E2:             412 * not switch it back in.
C2E2:             413 *
C2E2:       C2E2  414 RESETRET EQU *
C2E2:8D 0B C0     415         STA  SETSLOTC3ROM ;swap in slot 3
C2E5:20 89 CA     416         JSR  TSTROMCRD ;ROM or no card plugged in?
C2E8:D0 03  C2ED  417         BNE  GORETN1   ;=>ROM or no card, leave $C3 slot
C2EA:8D 0A C0     418         STA  SETINTC3ROM ;card, enable internal ROM
C2ED:60           419 GORETN1 RTS
C2EE:             420 *
C2EE:88 95 8A 8B  421 ESCIN   DFB  $88,$95,$8A,$8B
C2F2:             422 *
C2F2:A4 24        423 B.RDKEYX LDY CH        ;get cursor position
C2F4:B1 28        424         LDA  (BASL),Y  ;and character
C2F6:2C 1F C0     425         BIT  RD80VID   ;80 columns?
C2F9:30 F2  C2ED  426         BMI  GORETN1   ;=>don't display cursor
C2FB:4C 26 CE     427         JMP  INVERT    ;else display cursor, exit
C2FE:             428 *
C2FE:       0002  429 ZSPAREC2 EQU C3ORG-*
C2FE:       0002  430         DS   C3ORG-*,0
C300:       0000  431         IFNE *-C3ORG
 S                432         FAIL 2,'C300   overflow'
C300:             433         FIN
```

```
C300:                   19          INCLUDE C3SPACE
C300:                    1 ****************************************
C300:                    2 *
C300:                    3 * THIS IS THE $C3XX ROM SPACE:
C300:                    4 * Note:  This page must not be used by any routines
C300:                    5 * called by the F8 ROM.  When it is referenced, it claims
C300:                    6 * the C800 space (kicking out anyone who was using it).
C300:                    7 * This also means that peripheral cards cannot use the AUXMOVE
C300:                    8 * and XFER routines from their C800 space.
C300:                    9 *
C300:                   10 ****************************************
C300:           C300    11 CN00     EQU  *
C300:           C300    12 BASICINT EQU  *
C300:2C 43 CE           13          BIT  SEV        ;set vflag (init)
C303:70 12      C317    14          BVS  BASICENT   ;(ALWAYS TAKEN)
C305:                   15 *
C305:                   16 * BASIC input entry point.  After a PR#3, this is the
C305:                   17 * address that is called to input each character.
C305:                   18 *
C305:           C305    19 BASICIN EQU  *
C305:38                 20          SEC
C306:90                 21          DFB  $90        ;BCC OPCODE (NEVER TAKEN)
C307:                   22 *
C307:                   23 * BASIC output entry point.  After a PR#3, this is the
C307:                   24 * address that is called to output each character.
C307:                   25 *
C307:           C307    26 BASICOUT EQU *
C307:18                 27          CLC
C308:B8                 28          CLV             ;CLEAR VFLAG (NOT INIT)
C309:50 0C      C317    29          BVC  BASICENT   ;(ALWAYS TAKEN)
C30B:                   30 *
C30B:                   31 * Pascal 1.1 Firmware Protocol table:
C30B:                   32 *
C30B:                   33 * This tables identifies this as an Apple //e 80 column
C30B:                   34 * card.  It points to the four routines available to
C30B:                   35 * programs doing I/O using the Pascal 1.1 Firmware
C30B:                   36 * Protocol.
C30B:                   37 *
C30B:01                 38          DFB  $01        ;GENERIC SIGNATURE BYTE
C30C:88                 39          DFB  $88        ;DEVICE SIGNATURE BYTE
C30D:                   40 *
C30D:4A                 41          DFB  #>JPINIT   ;PASCAL INIT
C30E:50                 42          DFB  #>JPREAD   ;PASCAL READ
C30F:56                 43          DFB  #>JPWRITE  ;PASCAL WRITE
C310:5C                 44          DFB  #>JPSTAT   ;PASCAL STATUS
C311:                   45 ****************************************
C311:                   46 *
C311:                   47 * 128K SUPPORT ROUTINE ENTRIES:
C311:                   48 *
C311:4C 76 C3           49          JMP  MOVE       ;MEMORY MOVE ACROSS BANKS
C314:4C C3 C3           50          JMP  XFER       ;TRANSFER ACROSS BANKS
C317:                   51 ****************************************
C317:                   52 *
C317:8D 7B 06           53 BASICENT STA CHAR
C31A:98                 54          TYA             ; AND Y
C31B:48                 55          PHA
C31C:8A                 56          TXA             ; AND X
C31D:48                 57          PHA
C31E:08                 58          PHP             ;SAVE CARRY & VFLAG
C31F:                   59 *
C31F:                   60 * If escape mode is allowed, the high bit of MSLOT is
C31F:                   61 * clear.  Set M.CTL to flag that 1) escapes are allowed, and
C31F:                   62 * 2) that control characters should not be echoed.
C31F:                   63 * M.CTL is cleared by BPRINT.
C31F:                   64 *
C31F:AD FB 04           65          LDA  MODE       ;else esc enable, ctl disable
C322:2C FB 07           66          BIT  MSLOT      ;get MSLOT
C325:30 05      C32C    67          BMI  NOGETLN    ;=>Esc disable, ctl char enable
C327:09 08              68          ORA  #M.CTL
C329:8D FB 04           69          STA  MODE
C32C:                   70 *
C32C:           C32C    71 NOGETLN EQU  *
C32C:20 6D C3           72          JSR  SETC8      ;SETUP C8 INDICATOR
C32F:28                 73          PLP             ;GET VFLAG (INIT)
C330:70 15      C347    74          BVS  JBASINIT   ;=>DO THE INIT
C332:                   75 *
C332:                   76 * If a PR#0 has been done, input should be transferred
C332:                   77 * from the video firmware to KEYIN.  This is detected
C332:                   78 * if the high bit of the mode byte is set.
C332:                   79 *
C332:90 10      C344    80          BCC  JC8        ;=>output, no problem
C334:AA                 81          TAX             ;test mode
C335:10 0D      C344    82          BPL  JC8        ;video firmware is on
C337:20 5B CD           83          JSR  SETKEYIN   ;else set FD1B as input
C33A:68                 84          PLA             ;restore registers
C33B:AA                 85          TAX
C33C:68                 86          PLA
C33D:A8                 87          TAY
C33E:AD 7B 06           88          LDA  CHAR
C341:6C 38 00           89          JMP  (KSWL)     ;go input the character
C344:                   90 *
C344:4C 7C C8           91 JC8      JMP  C8BASIC    ;GET OUT OF CN SPACE
C347:4C 03 C8           92 JBASINIT JMP BASICINIT ;=>GOTO C8 SPACE
C34A:                   93 *
C34A:           C34A    94 JPINIT   EQU  *
C34A:20 6D C3           95          JSR  SETC8      ;SETUP C8 INDICATOR
C34D:4C B4 C9           96          JMP  PINIT      ;XFER TO PASCAL INIT
C350:           C350    97 JPREAD   EQU  *
C350:20 6D C3           98          JSR  SETC8      ;SETUP C8 INDICATOR
C353:4C D6 C9           99          JMP  PREAD      ;XFER TO PASCAL READ
C356:           C356   100 JPWRITE  EQU  *
C356:20 6D C3          101          JSR  SETC8      ;SETUP C8 INDICATOR
C359:4C F0 C9          102          JMP  PWRITE     ;XFER TO PASCAL WRITE
C35C:                  103 *
C35C:AA                104 JPSTAT   TAX             ;is request code = 0?
C35D:F0 08      C367   105          BEQ  PIORDY     ;=>yes, ready for output
C35F:CA                106          DEX             ;check for any input
C360:D0 07      C369   107          BNE  PSTERR     ;=>bad request, return error
```

```
C362:2C 00 C0      108          BIT  KBD        ;look for a key
C365:10 04   C36B  109          BPL  PNOTRDY    ;=>no keystroked
C367:38            110 PIORDY   SEC
C368:60            111          RTS
C369:              112 *
C369:A2 03         113 PSTERR   LDX  #3         ;else flag error
C36B:18            114 PNOTRDY CLC
C36C:60            115          RTS
C36D:              116 ****************************************
C36D:              117 * NAME     : SETC8
C36D:              118 * FUNCTION: SETUP IRQ $C800 PROTOCOL
C36D:              119 * INPUT    : NONE
C36D:              120 * OUTPUT   : NONE
C36D:              121 * VOLATILE: NOTHING
C36D:              122 * CALLS    : NOTHING
C36D:              123 ****************************************
C36D:              124 *
C36D:       C36D   125 SETC8    EQU  *
C36D:A2 C3         126          LDX  #<CN00     ;SLOT NUMBER
C36F:8E F8 07      127          STX  MSLOT      ;STUFF IT
C372:AE FF CF      128          LDX  $CFFF      ;kick out other $C8 ROMs
C375:60            129          RTS
C376:              130 ****************************************
C376:              131 * NAME     : MOVE
C376:              132 * FUNCTION: PERFORM CROSSBANK MEMORY MOVE
C376:              133 * INPUT    : A1=SOURCE ADDRESS
C376:              134 *          : A2=SOURCE END
C376:              135 *          : A4=DESTINATION START
C376:              136 *          : CARRY SET=MAIN-->CARD
C376:              137 *                CLR=CARD-->MAIN
C376:              138 * OUTPUT   : NONE
C376:              139 * VOLATILE: NOTHING
C376:              140 * CALLS    : NOTHING
C376:              141 ****************************************
C376:              142 *
C376:       C376   143 MOVE     EQU  *
C376:48            144          PHA             ;SAVE AC
C377:98            145          TYA             ; AND Y
C378:48            146          PHA
C379:AD 13 C0      147          LDA  RDRAMRD    ;SAVE STATE OF
C37C:48            148          PHA             ; MEMORY FLAGS
C37D:AD 14 C0      149          LDA  RDRAMWRT
C380:48            150          PHA
C381:              151 *
C381:              152 * SET FLAGS FOR CROSSBANK MOVE:
C381:              153 *
C381:90 08   C38B  154          BCC  MOVEC2M    ;=>CARD-->MAIN
C383:8D 02 C0      155          STA  RDMAINRAM  ;SET FOR MAIN
C386:8D 05 C0      156          STA  WRCARDRAM  ; TO CARD
C389:B0 06   C391  157          BCS  MOVESTRT   ;=>(ALWAYS TAKEN)
C38B:              158 *
C38B:       C38B   159 MOVEC2M EQU  *
C38B:8D 04 C0      160          STA  WRMAINRAM  ;SET FOR CARD
C38E:8D 03 C0      161          STA  RDCARDRAM  ; TO MAIN
```

```
C391:              162 *
C391:       C391   163 MOVESTRT EQU *
C391:A0 00         164          LDY  #0         ;DUMMY INDEX
C393:              165 *
C393:       C393   166 MOVELOOP EQU *
C393:B1 3C         167          LDA  (A1L),Y    ;GET A BYTE
C395:91 42         168          STA  (A4L),Y    ;MOVE IT
C397:E6 42         169          INC  A4L
C399:D0 02   C39D  170          BNE  NXTA1
C39B:E6 43         171          INC  A4H
C39D:A5 3C         172 NXTA1    LDA  A1L
C39F:C5 3E         173          CMP  A2L
C3A1:A5 3D         174          LDA  A1H
C3A3:E5 3F         175          SBC  A2H
C3A5:E6 3C         176          INC  A1L
C3A7:D0 02   C3AB  177          BNE  C01
C3A9:E6 3D         178          INC  A1H
C3AB:90 E6   C393  179 C01      BCC  MOVELOOP   ;=>MORE TO MOVE
C3AD:              180 *
C3AD:              181 * RESTORE ORIGINAL FLAGS:
C3AD:              182 *
C3AD:8D 04 C0      183          STA  WRMAINRAM ;CLEAR FLAG2
C3B0:68            184          PLA             ;GET ORIGINAL STATE
C3B1:10 03   C3B6  185          BPL  C03        ;=>IT WAS OFF
C3B3:8D 05 C0      186          STA  WRCARDRAM
C3B6:       C3B6   187 C03      EQU  *
C3B6:8D 02 C0      188          STA  RDMAINRAM ;CLEAR FLAG1
C3B9:68            189          PLA             ;GET ORIGINAL STATE
C3BA:10 03   C3BF  190          BPL  MOVERET    ;=>IT WAS OFF
C3BC:8D 03 C0      191          STA  RDCARDRAM
C3BF:       C3BF   192 MOVERET EQU  *
C3BF:68            193          PLA             ;RESTORE Y
C3C0:A8            194          TAY
C3C1:68            195          PLA             ; AND AC
C3C2:60            196          RTS
C3C3:              197 ****************************************
C3C3:              198 * NAME     : XFER
C3C3:              199 * FUNCTION: TRANSFER CONTROL CROSSBANK
C3C3:              200 * INPUT    : $03ED=TRANSFER ADDR
C3C3:              201 *          : CARRY SET=XFER TO CARD
C3C3:              202 *                CLR=XFER TO MAIN
C3C3:              203 *          : VFLAG CLR=USE STD ZP/STK
C3C3:              204 *                SET=USE ALT ZP/STK
C3C3:              205 * OUTPUT   : NONE
C3C3:              206 * VOLATILE: $03ED/03EE IN DEST BANK
C3C3:              207 * CALLS    : NOTHING
C3C3:              208 * NOTE     : ENTERED VIA JMP, NOT JSR
C3C3:              209 ****************************************
C3C3:              210 *
C3C3:       C3C3   211 XFER     EQU  *
C3C3:48            212          PHA             ;SAVE AC ON CURRENT STACK
C3C4:              213 *
C3C4:              214 * COPY DESTINATION ADDRESS TO THE
C3C4:              215 *  OTHER BANK SO THAT WE HAVE IT
```

```
C3C4:                216 *  IN CASE WE DO A SWAP:
C3C4:                217 *
C3C4:AD ED 03        218         LDA  $03ED      ;GET XFERADDR LO
C3C7:48              219         PHA             ;SAVE ON CURRENT STACK
C3C8:AD EE 03        220         LDA  $03EE      ;GET XFERADDR HI
C3CB:48              221         PHA             ;SAVE IT TOO
C3CC:                222 *
C3CC:                223 * SWITCH TO APPROPRIATE BANK:
C3CC:                224 *
C3CC:90 08    C3D6   225         BCC  XFERC2M    ;=>CARD-->MAIN
C3CE:8D 03 C0        226         STA  RDCARDRAM ;SET FOR RUNNING
C3D1:8D 05 C0        227         STA  WRCARDRAM ; IN CARD RAM
C3D4:B0 06    C3DC   228         BCS  XFERZP     ;=> always taken
C3D6:         C3D6   229 XFERC2M EQU  *
C3D6:8D 02 C0        230         STA  RDMAINRAM ;SET FOR RUNNING
C3D9:8D 04 C0        231         STA  WRMAINRAM ; IN MAIN RAM
C3DC:                232 *
C3DC:         C3DC   233 XFERZP  EQU  *          ;SWITCH TO ALT ZP/STK
C3DC:68              234         PLA             ;STUFF XFERADDR
C3DD:8D EE 03        235         STA  $03EE      ; HI AND
C3E0:68              236         PLA
C3E1:8D ED 03        237         STA  $03ED      ;  LO
C3E4:68              238         PLA             ;RESTORE AC
C3E5:70 05    C3EC   239         BVS  XFERAZP    ;=>switch in alternate zp
C3E7:8D 08 C0        240         STA  SETSTDZP  ;else force standard zp
C3EA:50 03    C3EF   241         BVC  JMPDEST    ;=>always perform transfer
C3EC:8D 09 C0        242 XFERAZP STA  SETALTZP  ;switch in alternate zp
C3EF:6C ED 03        243 JMPDEST JMP  ($03ED)    ;=>off we go
C3F2:                244 *
C3F2:         0002   245         DS   C3ORG+$F4-*,0 ;pad to interrupt stuff
C3F4:                246 *
C3F4:                247 * This is where the interrupt routine returns to.
C3F4:                248 * At this point the ROM is not necessarily switched in so...
C3F4:                249 *
C3F4:8D 81 C0        250 IRQDONE STA  $C081      ;read ROM, write RAM
C3F7:4C 7A FC        251         JMP  IRQDONE2   ;and jump to ROM
C3FA:                252 *
C3FA:                253 * This is the main entry point for the interrupt
C3FA:                254 * handler.  This switches in the internal ROM and
C3FA:                255 * jumps to the main part of the interrupt handler
C3FA:                256 * at $C400.
C3FA:                257 *
C3FA:2C 15 C0        258 irq     bit  rdcxrom    ;Test internal or external rom
C3FD:8D 07 C0        259         sta  setintcxrom ;Force in ROM to get to interrupt handler
C400:                260 *
C400:                261 * Fall into $C400 which is now switched in!!
C400:                262 *
C400:                 20         INCLUDE IRQ
C400:                  1 *
C400:                  2 * Here is the main interrupt handler
C400:                  3 *
C400:                  4 ****************************************
C400:         C400     5 newirq  equ  *
C400:D8                6         cld             ;make no assumptions!!
C401:38                7         sec             ;C=1 if internal slot space
C402:30 01    C405     8         bmi  irqintcx
C404:18                9         clc
C405:48               10 irqintcx pha            ;Save A on stack instead of $45
C406:48               11         pha             ;Make room for rts if needed
C407:48               12         pha
C408:8A               13         txa             ;Save X
C409:BA               14         tsx             ;Get stack pointer for BRK bit
C40A:E8               15         inx             ;Can't do add cause we need C
C40B:E8               16         inx
C40C:E8               17         inx
C40D:E8               18         inx
C40E:48               19         pha
C40F:98               20         tya             ;and Y
C410:48               21         pha
C411:BD 00 01         22         lda  $100,x     ;Get status for break test
C414:29 10            23         and  #$10       ;A = $10 if break
C416:A8               24         tay             ;Save it for later
C417:                 25 * Now test & set the state of the machine. Don't alter Y
C417:AD 18 C0         26         lda  rd80col    ;Test for 80 store and page 2
C41A:2D 1C C0         27         and  rdpage2
C41D:29 80            28         and  #$80       ;Make it 0 or $80
C41F:F0 05    C426    29         beq  irq2       ;Branch if no change needed
C421:A9 20            30         lda  #$20       ;Set shifted page 2 reset bit
C423:8D 54 C0         31         sta  txtpagel   ;Set page 1
C426:2A               32 irq2    rol  A          ;Align bit & shift in slotcx bit
C427:2C 13 C0         33         bit  rdramrd    ;Are we reading from aux ram?
C42A:10 05    C431    34         bpl  irq3       ;Branch if main ram read
C42C:8D 02 C0         35         sta  rdmainram ;Else, switch main in
C42F:09 20            36         ora  #$20       ;and record the event
C431:2C 14 C0         37 irq3    bit  rdramwrt  ;Do the same for ram write
C434:10 05    C43B    38         bpl  irq4
C436:8D 04 C0         39         sta  wrmainram
C439:09 10            40         ora  #$10
C43B:         C43B    41 irq4    equ  *
C43B:2C 12 C0         42 irq5    bit  rdlcram    ;Determine if language card active
C43E:10 0C    C44C    43         bpl  irq7
C440:09 0C            44         ora  #$0C       ;Sets two bits. Second is redundant
C442:2C 11 C0         45         bit  rdlcbnk2  ;if INC used to restore.
C445:10 02    C449    46         bpl  irq6       ;Branch if not page 2 of $D000
C447:49 06            47         eor  #$06       ;Set bits for page 2
C449:8D 81 C0         48 irq6    sta  romin      ;Enable ROM STA leaves write enable alone
C44C:2C 16 C0         49 irq7    bit  rdaltzp    ;Last...and very important
C44F:10 0D    C45E    50         bpl  irq8       ;If alternate stack
C451:BA               51         tsx             ;store current stack pointer at $101
C452:8E 01 01         52         stx  $101
C455:AE 00 01         53         ldx  $100       ;Retreve main stack pointer from $100
C458:9A               54         txs
C459:8D 08 C0         55         sta  setstdzp
C45C:09 80            56         ora  #$80       ;Mark stack switched
C45E:88               57 irq8    dey             ;Was it a break?
C45F:30 0C    C46D    58         bmi  irq9
C461:85 44            59         sta  macstat    ;Save state of machine
C463:68               60         pla             ;Restore registers
```

```
C464:A8             61          tay
C465:68             62          pla
C466:AA             63          tax
C467:68             64          pla
C468:68             65          pla             ;A stored where RTS address would go
C469:68
  66          pla
C46A:4C 47 FA       67          jmp  newbreak   ;Go to normal break routine stuff
C46D:48             68 irq9     pha             ;Save state of machine on stack
C46E:AD F8 07       69          lda  mslot      ;Save mslot
C471:48             70          pha
C472:A9 C3          71          lda  #<irqdone  ;Save return irq address
C474:48             72          pha
C475:A9 F4          73          lda  #>irqdone  ;so when interrupt does RTI
C477:48             74          pha             ;It returns to irqdone
C478:08             75          php             ;Status for user's RTI
C479:4C 74 FC       76          jmp  irquser    ;Off to the user
C47C:               77 * The user's RTI returns here
C47C:               78 * BEWARE
C47C:               79 *  The rom must be reenabled with a LDA romin
C47C:               80 *  This way if the LC was write protected, it still is
C47C:               81 *   if it was write enabled, it still is
C47C:               82 *   if it was being write enabled ( 2 ldas), it still will be
C47C:               83 *  The restore loop uses an INC because some of the switches are read
C47C:               84 *  and some are write.  It must be an INC abs,x since both the 6502 and
C47C:               85 *  the 65C02 do two reads before the write.
C47C:AD 81 C0       86 irqfix   lda  romin      ;Must be lda!
C47F:68             87          pla             ;Recover machine state
C480:10 07   C489   88          bpl  irqdnl     ;Branch if main ZP
C482:8D 09 C0       89          sta  setaltzp
C485:AE 01 01       90          ldx  $101       ;Get alt stack pointer
C488:9A             91          txs
C489:A0 06          92 irqdnl   ldy  #$06       ;Y = index into table of switch addresses
C48B:10 06   C493   93 irqdn2   bpl  irqdn3     ;Branch if no change
C48D:BE C1 C4       94          ldx  irqtble,y  ;Get soft switch address
C490:FE 00 C0       95          inc  $C000,x    ;Hit the switch. NO PAGE CROSS!
C493:88             96 irqdn3   dey
C494:30 03   C499   97          bmi  irqdn4
C496:0A             98          asl  A          ;Get next bit to check
C497:D0 F2   C48B   99          bne  irqdn2
C499:0A            100 irqdn4   asl  A          ;C = 1 if internal slot space
C49A:0A            101          asl  A
C49B:68            102          pla             ;Restore the registers
C49C:A8            103          tay
C49D:BA            104          tsx             ;Save the stack pointer
C49E:A9 40         105          lda  #$40       ;RTI opcode
C4A0:48            106          pha
C4A1:A9 C0         107          lda  #<setslotcxrom
C4A3:48            108          pha
C4A4:A9 06         109          lda  #>setslotcxrom
C4A6:69 00         110          adc  #0         ;Add 1 if internal slot space
C4A8:48            111          pha
C4A9:A9 8D         112          lda  #$8D       ;STA setslotcxrom
C4AB:48            113          pha
C4AC:9A            114          txs             ;Restore stack pointer
C4AD:8A            115          txa             ;Make return address on stack point to code on stack
C4AE:69 03         116          adc  #3         ;C = 0 from earlier adc
C4B0:AA            117          tax
C4B1:38            118          sec
C4B2:E9 07         119          sbc  #7         ;Point to where code starts
C4B4:9D 00 01      120          sta  $100,x
C4B7:E8            121          inx
C4B8:A9 01         122          lda  #$1
C4BA:9D 00 01      123          sta  $100,x
C4BD:68            124          pla
C4BE:AA            125          tax
C4BF:68            126          pla
C4C0:60            127          rts             ;Go to code on stack


C4C1:83 8B 8B      129 irqtble dfb  >lcbank2,>lcbank1,>lcbank1
C4C4:05 03 55      130         dfb  >wrcardram,>rdcardram,>txtpage2
C4C7:              131         INCLUDE DIAGS
----- NEXT OBJECT FILE NAME IS REFLIST.1
C600:        C600    1         ORG  C30RG+$300
C600:                2 * These routines test all 64K RAM, as well as the 64K on an Auxiliary
C600:                3 * memory card (when present).  With the exception of the INTCXROM switch
C600:                4 * of the IOU, all combinations of the IOU switches are tested and ver-
C600:                5 * ified.  All configurations of the MMU switches are also tested.
C600:                6 *
C600:                7 * In the event of any failure, the diagnostic is halted. A message
C600:                8 * is written to screen memory indicating the source of the failure.
C600:                9 * When RAM fails the message is composed of "RAM ZP" (indicating failure
C600:               10 * detected in the first page of RAM) or "RAM" (meaning the other 63.75K),
C600:               11 * followed by a binary representation of the failing bits set to "1".
C600:               12 * For example, "RAM   0 1 1 0 0 0 0 0" indicates that bits 5 and 6 were
C600:               13 * detected as failing.  To represent auxiliary memory, a "*" symbol is
C600:               14 * printed preceeding the message.
C600:               15 *
C600:               16 * When the MMU or IOU fail, the message is simply "MMU" or "IOU".
C600:               17 *
C600:               18 * The test will run continuously for as long as the Open and Closed
C600:               19 * Apple keys remain depressed (or no keyboard is connected) and no
C600:               20 * failures are encountered.  The message "System OK" will appear in
C600:               21 * the middle of the screen when a successful cycle has been run and
C600:               22 * either of the Apple keys are no longer depressed. Another cycle
C600:               23 * may be initiated by pressing both Apple keys again while this message
C600:               24 * is on the screen.  To exit diagnostics, Control-Reset must be pressed
C600:               25 * without the Apple keys depressed.
C600:               26 *
C600:        C051   27 TEXT    equ  $C051
C600:        0009   28 IOUIDX  equ  $09
C600:        0001   29 MMUIDX  equ  $01
C600:        05B8   30 SCREEN  equ  $5B8
C600:        C000   31 IOSPACE equ  $C000
C600:               32 *
C600:        C600   33 DIAGS   equ  *
```

```
C600:8D 50 C0          34          sta  $C050
C603:                  35 * Test Zero-Page, then all of memory.  Report errors when encountered.
C603:                  36 * Accumulator can be anything on entry. All registers used, but no stack.
C603:                  37 * Addresses between $C000 and $CFFF are mapped to main $D000 bank.
C603:                  38 * Auxillary 64K is also tested if present.

C603:A0 04             40 TSTZPG   ldy  #$4
C605:A2 00             41          ldx  #0
C607:18                42 zp1      clc                 ;fill zero page with a pattern
C608:79 B4 C7          43          adc  ntbl,y
C60B:95 00             44          sta  $00,x
C60D:E8                45          inx
C60E:D0 F7    C607     46          bne  zp1            ;after all bytes filled,
C610:18                47 zp2      clc                 ; ACC has original value again.
C611:79 B4 C7          48          adc  ntbl,y         ;so values can be tested
C614:D5 00             49          cmp  $00,x
C616:D0 10    C628     50          bne  ZPERROR        ;branch if memory failed
C618:E8                51          inx
C619:D0 F5    C610     52          bne  zp2            ;loop until all 256 bytes tested
C61B:6A                53          ror  a              ;change ACC so location $FF will change
C61C:2C 19 C0          54          bit  RDVBLBAR       ; use RDVBLBAR for a little randomness...
C61F:10 02    C623     55          bpl  zp3
C621:49 A5             56          eor  #$A5
C623:88                57 zp3      dey                 ;use a different pattern now
C624:10 E1    C607     58          bpl  zp1            ;branch to retest with other value
C626:30 06    C62E     59          bmi  TSTMEM         ;branch always


C628:55 00             61 ZPERROR  eor  $00,x          ;which bits are bad?
C62A:18                62          clc                 ;indicate zero page failure
C62B:4C CD C6          63          jmp  BADBITS
C62E:         C62E     64 TSTMEM   equ  *
C62E:86 01             65          stx  $01
C630:86 02             66          stx  $02
C632:86 03             67          stx  $03
C634:A2 04             68          ldx  #4             ;do RAM $100-$FFFF five times
C636:86 04             69          stx  $04
C638:E6 01             70 meml     inc  $01            ;point to page 1 first
C63A:A8                71 mem2     tay                 ;save ACC in Y for now
C63B:8D 83 C0          72          sta  $C083          ;anticipate not $C000 range...
C63E:8D 83 C0          73          sta  $C083
C641:A5 01             74          lda  $01            ;get page address
C643:29 F0             75          and  #$F0           ;test for $C0-$CF range
C645:C9 C0             76          cmp  #$C0
C647:D0 0C    C655     77          bne  mem3           ;branch if not...
C649:AD 8B C0          78          lda  $C08B
C64C:AD 8B C0          79          lda  $C08B          ;select primary $D000 space
C64F:A5 01             80          lda  $01
C651:69 0F             81          adc  #$F            ;Plus carry =+$10
C653:D0 02    C657     82          bne  mem4           ;branch always taken
C655:A5 01             83 mem3     lda  $01
C657:85 03             84 mem4     sta  $03
C659:98                85          tya                 ;restore pattern to ACC
C65A:A0 00             86          ldy  #$00           ;fill this page with the pattern

C65C:18                87 mem5     clc
C65D:7D B4 C7          88          adc  ntbl,x
C660:91 02             89          sta  ($02),y
C662:CA                90          dex                 ;keep x in the range 0-4
C663:10 02    C667     91          bpl  mem6
C665:A2 04             92          ldx  #4
C667:C8                93 mem6     iny                 ;all 256 filled yet?
C668:D0 F2    C65C     94          bne  mem5           ;branch if not
C66A:E6 01             95          inc  1              ;bump page #
C66C:D0 CC    C63A     96          bne  mem2           ;loop through $0100 to $FF00


C66E:E6 01             98          inc  $01            ;point to page 1 again
C670:A8                99 mem7     tay                 ;save ACC in Y for now
C671:AD 83 C0         100          lda  $C083          ;anticipate not $C000 range...
C674:AD 83 C0         101          lda  $C083
C677:A5 01            102          lda  $01            ;get page address
C679:29 F0            103          and  #$F0           ;test for $C0-$CF range
C67B:C9 C0            104          cmp  #$C0
C67D:D0 09    C688    105          bne  mem8           ;branch if not...
C67F:AD 8B C0         106          lda  $C08B          ;select primary $D000 space
C682:A5 01            107          lda  $01
C684:69 0F            108          adc  #$F            ;Plus carry =+$10
C686:D0 02    C68A    109          bne  mem9           ;branch always taken
C688:A5 01            110 mem8     lda  $01
C68A:85 03            111 mem9     sta  $03
C68C:98               112          tya                 ;restore pattern to ACC
C68D:A0 00            113          ldy  #$00           ;fill this page with the pattern
C68F:18               114 memA     clc
C690:7D B4 C7         115          adc  ntbl,x
C693:51 02            116          eor  ($02),y
C695:D0 35    C6CC    117          bne  MEMERROR       ;if any bits are different, give up!!!
C697:B1 02            118          lda  ($02),y        ;restore correct pattern
C699:CA               119          dex                 ;keep x in the range 0-4
C69A:10 02    C69E    120          bpl  memB
C69C:A2 04            121          ldx  #4
C69E:C8               122 memB     iny                 ;all 256 filled yet?
C69F:D0 EE    C68F    123          bne  memA           ;branch if not
C6A1:E6 01            124          inc  1              ;bump page #
C6A3:D0 CB    C670    125          bne  mem7           ;loop through $0100 to $FF00
C6A5:6A               126          ror  a              ;change ACC for next pass
C6A6:2C 19 C0         127          bit  RDVBLBAR       ; use RDVBLBAR for a little randomness...
C6A9:10 02    C6AD    128          bpl  memC
C6AB:49 A5            129          eor  #$A5
C6AD:C6 04            130 memC     dec  $04            ;have 5 passes been done yet?
C6AF:10 87    C638    131          bpl  meml           ;branch if not...


C6B1:AA               133          TAX                 ;save acc
C6B2:20 8D C9         134          JSR  STAUX          ;set aux memory & write $EE to $C00,$800
C6B5:D0 07    C6BE    135          BNE  SWCHTST1       ;=>not 128K
C6B7:0E 00 0C         136          ASL  $C00           ;shift test byte
C6BA:0A               137          ASL  A
C6BB:CD 00 0C         138          CMP  $C00           ;check memory
```

```
C6BE:D0 76   C736  139 SWCHTST1 BNE SWCHTST   ;=>not 128K
C6C0:CD 00 08      140          CMP  $800      ;look for shadowing
C6C3:F0 71   C736  141          BEQ  SWCHTST   ;=>not 128K
C6C5:8A            142          txa
C6C6:8D 09 C0      143          STA  SETALTZP  ;swap in alt zero page
C6C9:4C 03 C6      144          jmp  TSTZPG    ; and test it!
C6CC:38            145 MEMERROR sec            ;indicate main ram failure
C6CD:AA            146 BADBITS tax             ;save bit pattern in x for now
C6CE:AD 13 C0      147          lda  RDRAMRD   ;determine if primary or auxillary RAM
C6D1:B8            148          clv            ;with V-FLG
C6D2:10 03   C6D7  149          bpl  bbits1    ;branch if primary bank
C6D4:2C B4 C7      150          bit  setv
C6D7:A9 A0         151 bbits1   lda  #$A0      ;try to clear video screen
C6D9:A0 06         152          ldy  #6
C6DB:99 FE BF      153 clrsts   sta  IOSPACE-2,y
C6DE:99 06 C0      154          sta  IOSPACE+6,y
C6E1:88            155          dey
C6E2:88            156          dey
C6E3:D0 F6   C6DB  157          bne  clrsts
C6E5:8D 51 C0      158          sta  TEXT
C6E8:8D 54 C0      159          sta  TXTPAGE1
C6EB:99 00 04      160 clrs     sta  $400,y
C6EE:99 00 05      161          sta  $500,y
C6F1:99 00 06      162          sta  $600,y
C6F4:99 00 07      163          sta  $700,y
C6F7:C8            164          iny
C6F8:D0 F1   C6EB  165          bne  clrs
C6FA:8A            166          txa            ;test for switch test failure
C6FB:F0 27   C724  167          beq  BADSWTCH  ;branch if it was a switch
C6FD:A0 03         168          ldy  #3
C6FF:B0 02   C703  169          bcs  badmain   ;branch if ZP ok
C701:A0 05         170          ldy  #5
C703:A9 AA         171 badmain  lda  #$AA      ;mark aux report with an asterisks
C705:50 03   C70A  172          bvc  badprim
C707:8D B0 05      173          sta  screen-8
C70A:B9 EA C7      174 badprim  lda  rmess,y
C70D:99 B1 05      175          sta  screen-7,y
C710:88            176          dey
C711:10 F7   C70A  177          bpl  badprim   ;message is either "RAM" or "RAM ZP"
C713:A0 10         178          ldy  #$10      ;print bits
C715:8A            179 bbits2   txa
C716:4A            180          lsr  a
C717:AA            181          tax
C718:A9 58         182          lda  #$58      ;bits are printed as ascii 0 or 1
C71A:2A            183          rol  a
C71B:99 B6 05      184          sta  screen-2,y
C71E:88            185          dey
C71F:88            186          dey
C720:D0 F3   C715  187          bne  bbits2
C722:F0 FE   C722  188 hangx    beq  hangx     ;hang forever and ever
C724:A0 02         189 BADSWTCH ldy  #2
C726:B9 F0 C7      190 bswtch1  lda  smess,y
C729:90 03   C72E  191          bcc  bswtch2   ;branch if MMU in error
C72B:B9 F3 C7      192          lda  smess+3,y ;else indicate IOU error
C72E:99 B8 05      193 bswtch2  sta  screen,y
C731:88            194          dey
C732:10 F2   C726  195          bpl  bswtch1   ;print "MMU" or "IOU"
C734:30 FE   C734  196 hangy    bmi  hangy     ;branch forever


C736:A0 01         198 SWCHTST ldy  #MMUIDX
C738:A9 7F         199 swtst1  lda  #$7F
C73A:6A            200 swtst2  ror  a          ;set switches of the IOU/MMU to match Accumulato
C73B:BE B9 C7      201          ldx  SWTBL0,y
C73E:F0 0F   C74F  202          beq  swtst4    ;branch if done setting switches
C740:90 03   C745  203          bcc  swtst3    ;branch if setting switch to 0-state
C742:BE C9 C7      204          ldx  SWTBL1,y  ;else get index to set switch to 1
C745:9D FF BF      205 swtst3  sta  IOSPACE-1,x ;set switch
C748:C8            206          iny
C749:D0 EF   C73A  207          bne  swtst2    ;branch always taken...
C74B:              208 *
C74B:AE 30 C0      209 click   ldx  $C030
C74E:2A            210          rol  a
C74F:88            211 swtst4  dey
C750:BE D9 C7      212          ldx  RSWTBL,y  ;now verify the settings just made
C753:F0 13   C768  213          beq  swtst6    ;branch if done this pass
C755:30 F4   C74B  214          bmi  click     ;branch if this switch no to be verified.
C757:2A            215          rol  a
C758:90 07   C761  216          bcc  swtst5
C75A:1E 00 C0      217          asl  IOSPACE,x
C75D:90 17   C776  218          bcc  swerr
C75F:B0 EE   C74F  219          bcs  swtst4    ;branch always
C761:1E 00 C0      220 swtst5  asl  IOSPACE,x
C764:B0 10   C776  221          bcs  swerr
C766:90 E7   C74F  222          bcc  swtst4    ;branch always
C768:              223 *
C768:2A            224 swtst6  rol  a          ;restore original value
C769:C8            225          iny            ; and IOU/MMU index
C76A:38            226          sec
C76B:E9 01         227          sbc  #1        ;try next pattern
C76D:B0 CB   C73A  228          bcs  swtst2
C76F:88            229          dey            ;was MMU just tested?
C770:D0 0B   C77D  230          bne  BIGLOOP   ;branch if IOU was just tested
C772:A0 09         231          ldy  #IOUIDX   ;else, go test IOU.
C774:D0 C2   C738  232          bne  swtst1    ;branch always taken...
C776:              233 *
C776:A2 00         234 swerr   ldx  #0         ;indicate switch error
C778:C0 0A         235          cpy  #IOUIDX+1 ;set carry if IOU was cause
C77A:4C D7 C6      236          jmp  bbits1
C77D:46 80         237 BIGLOOP lsr  $80
C77F:D0 B5   C736  238          bne  SWCHTST
C781:A9 A0         239 blp2    lda  #$A0
C783:A0 00         240          ldy  #0
C785:99 00 04      241 blp3    sta  $400,y    ;clear screen for success message
C788:99 00 05      242          sta  $500,y
C78B:99 00 06      243          sta  $600,y
C78E:99 00 07      244          sta  $700,y
C791:C8            245          iny
```

```
C792:D0 F1    C785  246          bne  blp3
C794:AD 61 C0       247 blp4     LDA  $C061      ;test for both Open and Closed Apple
C797:2D 62 C0       248          AND  $C062      ; pressed
C79A:0A             249          asl  a          ;put result in carry
C79B:E6 FF          250          INC  $FF
C79D:A5 FF          251          LDA  $FF
C79F:90 03    C7A4  252          bcc  dquit
C7A1:4C 00 C6       253          jmp  DIAGS
C7A4:               254 *
C7A4:AD 51 C0       255 dquit    lda  TEXT       ;put success message on the screen
C7A7:A0 08          256          ldy  #8
C7A9:B9 F6 C7       257 suc2     lda  success,y
C7AC:99 B8 05       258          sta  SCREEN,y
C7AF:88             259          dey
C7B0:10 F7    C7A9  260          bpl  suc2
C7B2:30 E0    C794  261          bmi  blp4       ;loop forever
C7B4:               262 *
C7B4:         C7B4  263 setv     equ  *
C7B4:53 43 2B 29    264 ntbl     dfb  83,67,43,41,7
C7B9:00 89 31 03    265 swtbl0   dfb $00,$89,$31,$03,$05,$09,$0b,$01,$00,$83,$51,$53,$55,$57,$0F, $0D
C7C9:00 81 31 04    266 swtbl1   dfb $00,$81,$31,$04,$06,$0A,$0C,$02,$00,$84,$52,$54,$56,$58,$10, $0E
C7D9:00 11 FF 13    267 rswtbl   dfb $00,$11,$FF,$13,$14,$16,$17,$18,$00,$12,$1A,$1B,$1C,$1D,$1E, $1F,$00
C7EA:               268          MSB  ON
C7EA:D2 C1 CD A0    269 rmess    asc  "RAM       ZP"
C7F0:CD CD D5 C9    270 smess    asc  "MMUIOU"


C7F6:D3 F9 F3 F4    272 success asc  "System   OK"
C7FF:         C7FF  273 zzzend  equ  *
C7FF:                22          INCLUDE C8SPACE
C7FF:         0001   1          DS   C8ORG-*,0 ;pad to C800
C800:                2 *
C800:                3 * This entry point is only used by Pascal 1.0
C800:                4 *
C800:4C B0 C9        5          JMP  PINIT1.0  ;PASCAL 1.0 INIT
C803:                6 *
C803:                7 * BASIC initialization:
C803:                8 *
C803:                9 * This is called by the $C3 space only after a PR#3 or
C803:               10 * the equivalent (a JSR $C300).
C803:               11 *
C803:               12 * It causes a copy of the $F8 ROM to be placed in the
C803:               13 * language card if the language card is switched in and
C803:               14 * the ID byte doesn't match.  It sets up all the
C803:               15 * screenhole variables to support its operation.  If the
C803:               16 * 80 column card is detected, it sets things up for 80 column
C803:               17 * operation, else 40 column operation.  Then it clears the
C803:               18 * screen and prints the character that was in the accumulator
C803:               19 * upon entry.
C803:               20 *
C803:         C803  21 BASICINIT EQU *
C803:20 F4 CE       22          JSR  COPYROM   ;If LC in, copy F8 to it
C806:20 2A C8       23          JSR  C3HOOKS   ;out=$C307, in=$C305
C809:20 2E CD       24          JSR  D040      ;set full 40-col window
C80C:A9 01          25          LDA  #M.MOUSE  ;init with mouse text off
C80E:8D FB 04       26          STA  MODE      ;Set BASIC video mode
C811:               27 *
C811:               28 * IS THERE A CARD?
C811:               29 *
C811:20 90 CA       30          JSR  TESTCARD  ;SEE IF CARD PLUGGED IN
C814:D0 08    C81E  31          BNE  CLEARIT   ;=>IT'S 40
C816:06 21          32          ASL  WNDWDTH   ;SET 80-COL WINDOW
C818:8D 01 C0       33          STA  SET80COL  ;ENABLE 80 STORE
C81B:8D 0D C0       34          STA  SET80VID  ; AND 80 VIDEO
C81E:               35 *
C81E:               36 * HOME & CLEAR:
C81E:               37 *
C81E:         C81E  38 CLEARIT EQU  *
C81E:8D 0F C0       39          STA  SETALTCHAR ;SET NORM/INV LCASE
C821:20 90 CC       40          JSR  X.FF      ;CLEAR IT
C824:AC 7B 05       41          LDY  OURCH     ;set up cursor for store
C827:4C 7E C8       42          JMP  BPRINT    ;always print a character
C82A:               43 *
C82A:A9 07          44 C3HOOKS LDA  #>BASICOUT ;set output hook first
C82C:85 36          45          STA  CSWL
C82E:A9 C3          46          LDA  #<CN00
C830:85 37          47          STA  CSWH
C832:               48 *
C832:               49 * C3IN is called by IN#0 if CSWH = #$C3
C832:               50 *
C832:A9 05          51 C3IN    LDA  #>BASICIN ;set input hook
C834:85 38          52          STA  KSWL
C836:A9 C3          53          LDA  #<CN00
C838:85 39          54          STA  KSWH
C83A:60             55          RTS            ;exit with A=$C3 for IN#0 stuff
C83B:               56 *
C83B:E6 4E          57 GETKEY  INC  RNDL      ;BUMP RANDOM SEED
C83D:D0 02    C841  58          BNE  GETK2
C83F:E6 4F          59          INC  RNDH
C841:AD 00 C0       60 GETK2   LDA  KBD       ;KEYPRESS?
C844:10 F5    C83B  61          BPL  GETKEY    ;=>NOPE
C846:8D 10 C0       62          STA  KBDSTRB   ;CLEAR STROBE
C849:60             63          RTS
C84A:               64 *
C84A:               65 ****************************************
C84A:               66 *
C84A:               67 * PASCAL 1.0 INPUT HOOK:
C84A:               68 *
C84A:         0003  69          DS   C8ORG+$4D-*,0 ;pad to 1.0 hooks
C84D:         0000  70          IFNE *-C8ORG-$4D ;ERR IF WRONG ADDR
 S                  71          FAIL 2,'C84D   HOOK ALIGNMENT'
C84D:               72          FIN
C84D:4C 50 C3       73          JMP  JPREAD    ;=>GO TO STANDARD READ
C850:               74 ****************************************
C850:               75 *
C850:               76 * CSETUP compensates for everything that the user
C850:               77 * can do to change the cursor status: poke CV, CH,
C850:               78 * OURCH, WNDWDTH.  It updates the video firmware's
```

```
C850:                   79 * versions of these values for its own use.
C850:                   80 * COPY USER'S CURSOR IF IT DIFFERS FROM
C850:                   81 *  WHAT WE LAST PUT THERE:
C850:                   82 *
C850:A5 25              83 CSETUP  LDA  CV         ;set up OURCV
C852:8D FB 05           84         STA  OURCV
C855:A4 24              85         LDY  CH         ;GET IT
C857:CC 7B 04           86         CPY  OLDCH      ;IS IT THE SAME?
C85A:F0 03   C85F       87         BEQ  CS2        ;=>YES, USE OUR OWN
C85C:8C 7B 05           88         STY  OURCH      ;update our cursor
C85F:A5 21              89 CS2     LDA  WNDWDTH    ;cursor horizontal must not
C861:18                 90         CLC             ;be greater than window width
C862:ED 7B 05           91         SBC  OURCH      ;if it is, then put cursor
C865:B0 05   C86C       92         BCS  CS3        ;at left edge of window
C867:A0 00              93         LDY  #0
C869:8C 7B 05           94         STY  OURCH
C86C:AC 7B 05           95 CS3     LDY  OURCH      ;exit with Y = CH
C86F:60                 96         RTS
C870:                   97 *
C870:                   98 * BIN and BOUT are used when characters are
C870:                   99 * input and output by the $F8 ROM while 80VID
C870:                  100 * is on.  They cannot use the $C3 entry points
C870:                  101 * because that switches in the $C8 space, causing
C870:                  102 * possible conflict with other $C8 users.
C870:                  103 * These routines are only called by the $C100-$C2FF space.
C870:                  104 *
C870:                  105 * These entry points will only work if the card was
C870:                  106 * first initialized using a PR#3.  80 columns will not
C870:                  107 * work simply by turning on the 80VID flag.
C870:                  108 *
C870:A4 35             109 BOUT   LDY  SAVY1      ;load Y stuffed by $F8 ROM
C872:18                110        CLC             ;signal an output
C873:B0 FE   C873      111        BCS  *          ;skip SEC
C874:        C874      112        ORG  *-1
C874:38                113 BIN    SEC             ;signal an input
C875:8D 7B 06          114        STA  CHAR       ;save the char
C878:98                115        TYA             ;save Y
C879:48                116        PHA
C87A:8A                117        TXA             ;save X
C87B:48                118        PHA
C87C:        C87C      119 C8BASIC EQU  *         ;BASIC IN/OUT
C87C:B0 5E   C8DC      120        BCS  BINPUT     ;=>input a character
0000:        0000        1 TEST   EQU  0          ;REAL VERSION
C87E:                   23        LST  ON,A,V
C87E:                   24        INCLUDE BPRINT
C87E:                    1 *
C87E:                    2 * This is the place where characters printed using the
C87E:                    3 * CSW hook are actually printed (or executed if they are
C87E:                    4 * control characters).
C87E:                    5 *
C87E:20 50 C8            6 BPRINT  JSR  CSETUP     ;setup user cursor
C881:AD 7B 06            7         LDA  CHAR       ;GET CHARACTER
C884:C9 8D               8         CMP  #$8D       ;IS IT C/R?
C886:D0 18   C8A0        9         BNE  NOWAIT     ;=>don't wait, OURCH ok
C888:AE 00 C0           10         LDX  KBD        ;IS KEY PRESSED?
C88B:10 13   C8A0       11         BPL  NOWAIT     ;NO
C88D:E0 93              12         CPX  #$93       ;IS IT CTL-S?
C88F:D0 0F   C8A0       13         BNE  NOWAIT     ;NO, IGNORE IT
C891:2C 10 C0           14         BIT  KBDSTRB    ;CLEAR STROBE
C894:AE 00 C0           15 KBDWAIT LDX  KBD        ;WAIT FOR NEXT KEYPRESS
C897:10 FB   C894       16         BPL  KBDWAIT
C899:E0 83              17         CPX  #$83       ;IF CTL-C, LEAVE IT
C89B:F0 03   C8A0       18         BEQ  NOWAIT     ; IN THE KBD BUFFER
C89D:2C 10 C0           19         BIT  KBDSTRB    ;CLEAR OTHER CHARACTER
C8A0:29 7F              20 NOWAIT  AND  #$7F       ;drop possible hi bit
C8A2:C9 20              21         CMP  #$20       ;IS IT CONTROL CHAR?
C8A4:B0 06   C8AC       22         BCS  BPNCTL     ;=>NOPE
C8A6:20 D2 CA           23         JSR  CTLCHARO   ;execute CTL if M.CTL ok
C8A9:4C BD C8           24         JMP  CTLON      ;=>enable ctl chrs
C8AC:                   25 *
C8AC:                   26 * NOT A CTL CHAR. PRINT IT.
C8AC:                   27 *
C8AC:        C8AC       28 BPNCTL  EQU  *
C8AC:AD 7B 06           29         LDA  CHAR       ;get char (all 8 bits)
C8AF:20 38 CE           30         JSR  STORCHAR   ;and display it
C8B2:                   31 *
C8B2:                   32 * BUMP THE CURSOR HORIZONTAL:
C8B2:                   33 *
C8B2:C8                 34         INY             ;bump it
C8B3:8C 7B 05           35         STY  OURCH      ;are we past the
C8B6:C4 21              36         CPY  WNDWDTH    ; end of the line?
C8B8:90 03   C8BD       37         BCC  CTLON      ;=>NO, NO PROBLEM
C8BA:20 51 CB           38         JSR  X.CR       ;YES, DO C/R
C8BD:                   39 *
C8BD:                   40 * M.CTL is set by RDCHAR and cleared here, after each
C8BD:                   41 * character is displayed.
C8BD:                   42 *
C8BD:AD FB 04           43 CTLON   LDA  MODE       ;enable printing of control chars
C8C0:29 F7              44         AND  #255-M.CTL
C8C2:8D FB 04           45         STA  MODE
C8C5:AD 7B 05           46 BIORET  LDA  OURCH      ;get newest cursor position
C8C8:2C 1F C0           47         BIT  RD80VID    ;IN 80-MODE?
C8CB:10 02   C8CF       48         BPL  SETALL     ;=>no, set other cursors
C8CD:A9 00              49         LDA  #0         ;pin CH to 0 for 80 columns
C8CF:85 24              50 SETALL  STA  CH
C8D1:8D 7B 04           51         STA  OLDCH      ;REMEMBER THE SETTING
C8D4:68                 52 GETREGS PLA             ;RESTORE
C8D5:AA                 53         TAX
C8D6:68                 54         PLA             ;X AND Y
C8D7:A8                 55         TAY
C8D8:AD 7B 06           56         LDA  CHAR
C8DB:60                 57         RTS             ;RETURN TO BASIC
C8DC:                   25         INCLUDE BINPUT
C8DC:                    1 *
C8DC:                    2 * BASIC input entry point called by entry point in the
C8DC:                    3 * $C3 space.  This is the way things normally happen.
C8DC:                    4 *
C8DC:A4 24               5 BINPUT  LDY  CH
```

```
C8DE:AD 7B 06          6         LDA  CHAR
C8E1:91 28             7         STA  (BASL),Y
C8E3:20 50 C8          8         JSR  CSETUP     ;get newest cursor
C8E6:20 26 CE          9 B.INPUT JSR  INVERT     ;invert that char
C8E9:20 3B C8         10         JSR  GETKEY     ;GET A KEY
C8EC:8D 7B 06         11         STA  CHAR       ;SAVE IT
C8EF:20 26 CE         12         JSR  INVERT     ;REMOVE CURSOR
C8F2:A8               13         TAY             ;preserve acc.
C8F3:                 14 *
C8F3:                 15 * On pure input, an uninterpreted character code should
C8F3:                 16 * be returned.  If M.CTL is set, however, escape functions
C8F3:                 17 * are enabled, and CTL-U causes the character under the
C8F3:                 18 * cursor to be picked up from the screen.
C8F3:                 19 * M.CTL is set whenever a character is requested using
C8F3:                 20 * RDCHAR in the $F8 ROM.
C8F3:                 21 *
C8F3:AD FB 04         22         LDA  MODE       ;is escape mode enabled?
C8F6:29 08            23         AND  #M.CTL
C8F8:F0 CB   C8C5     24         BEQ  BIORET     ;=>no,return
C8FA:C0 8D            25         CPY  #$8D       ;was it a CR
C8FC:D0 08   C906     26         BNE  NOTACR     ;=>nope, not a CR
C8FE:AD FB 04         27         LDA  MODE
C901:29 F7            28         AND  #255-M.CTL ;else end of line...
C903:8D FB 04         29         STA  MODE       ; disable escape
C906:        C906     30 NOTACR  EQU  *
C906:C0 9B            31         CPY  #$9B       ;ESCAPE KEY?
C908:F0 11   C91B     32         BEQ  ESCAPING   ;=>YES IT IS
C90A:                 33 *
C90A:                 34 * Not an escape sequence.  Check for control-u.
C90A:                 35 *
C90A:C0 95            36         CPY  #$95       ;is it control-U?
C90C:D0 B7   C8C5     37         BNE  BIORET     ;no, return to caller
C90E:AC 7B 05         38         LDY  OURCH      ;get horizontal position
C911:20 44 CE         39         JSR  PICK       ;and pick up the char
C914:09 80            40         ORA  #$80       ;always pick as normal
C916:8D 7B 06         41         STA  CHAR       ;save keystroke
C919:D0 AA   C8C5     42         BNE  BIORET     ;=>(always) return to caller
C91B:                 43 *
C91B:                 44 * Start an escape sequence.  If the next character
C91B:                 45 * pressed is one of the following, it is executed.
C91B:                 46 * Otherwise it is ignored.
C91B:                 47 *
C91B:                 48 *    @ - home & clear
C91B:                 49 *    E - clear to end of line
C91B:                 50 *    F - clear to end of screen
C91B:                 51 *    I - move cursor up
C91B:                 52 *    J - move cursor left
C91B:                 53 *    K - move cursor right
C91B:                 54 *    M - move cursor down
C91B:                 57 *    4 - enter 40 column mode
C91B:                 58 *    8 - enter 80 column mode
C91B:                 59 * CTL-D- disable the printing of control characters
C91B:                 60 * CTL-E- enable the printing of control characters
C91B:                 61 * CTL-Q- quit (PR#0/IN#0)
C91B:                 62 *   The four arrow keys (as IJKM)
C91B:                 63 *
C91B:                 64         MSB  OFF
C91B:        C91B     65 ESCAPING EQU *
C91B:20 B1 CE         66         JSR  ESCON      ;ESCAPE CURSOR ON
C91E:20 3B C8         67         JSR  GETKEY     ;GET ESCAPE FUNCTION
C921:20 C4 CE         68         JSR  ESCOFF     ;REPLACE ORIGINAL CHARACTER
C924:20 14 CE         69         JSR  UPSHFT     ;upshift the char
C927:29 7F            70         AND  #$7F       ;DROP HI BIT
C929:A0 10            71         LDY  #ESCNUM-1  ;COUNT/INDEX
C92B:D9 7C C9         72 ESC2    CMP  ESCTAB,Y   ;IS IT A VALID ESCAPE?
C92E:F0 05   C935     73         BEQ  ESC3       ;=>YES
C930:88               74         DEY
C931:10 F8   C92B     75         BPL  ESC2       ;TRY 'EM ALL...
C933:30 0F   C944     76         BMI  ESCSPEC    ;=>MAYBE IT'S A SPECIAL ONE
C935:                 77 *
C935:        C935     78 ESC3    EQU  *
C935:B9 6B C9         79         LDA  ESCCHAR,Y  ;GET CHAR TO "PRINT"
C938:29 7F            80         AND  #$7F       ;DROP HI BIT (FLAG)
C93A:20 D6 CA         81         JSR  CTLCHAR    ;EXECUTE IT
C93D:B9 6B C9         82         LDA  ESCCHAR,Y  ;GET FLAG
C940:30 D9   C91B     83         BMI  ESCAPING   ;=>STAY IN ESCAPE MODE
C942:10 A2   C8E6     84         BPL  B.INPUT    ;=>QUIT ESCAPE MODE
C944:                 85 *
C944:        C944     86 ESCSPEC EQU  *
C944:A8               87         TAY             ;put char here
C945:AD FB 04         88         LDA  MODE       ;so we can put this here
C948:C0 11            89         CPY  #$11       ;was it Quit?
C94A:D0 0B   C957     90         BNE  ESCSP1     ;=>no
C94C:20 4D CD         91         JSR  X.NAK      ;do the quitting stuff
C94F:A9 98            92         LDA  #$98       ;make it look like
C951:8D 7B 06         93         STA  CHAR       ;CTL-X was pressed
C954:4C C5 C8         94         JMP  BIORET     ;=>quit the card forever
C957:                 95 *
C957:C0 05            96 ESCSP1  CPY  #$05       ;was it CTL-E for enable
C959:D0 08   C963     97         BNE  ESCSP4     ;=>no
C95B:29 DF            98         AND  #255-M.CTL2 ;yes, enable ctl chars
C95D:8D FB 04         99 ESCSP2  STA  MODE       ;save new mode
C960:4C E6 C8        100 ESCSP3  JMP  B.INPUT    ;=> exit escape mode
C963:                101 *
C963:C0 04           102 ESCSP4  CPY  #$04       ;was it CTL-D for disable
C965:D0 F9   C960    103         BNE  ESCSP3     ;=>no, exit escape mode
C967:09 20           104         ORA  #M.CTL2    ;disable ctl chars
C969:D0 F2   C95D    105         BNE  ESCSP2     ;=> exit escape mode
C96B:                106 *
C96B:                107 * This table contains the control characters which,
C96B:                108 * when executed, carry out the escape functions.  If
C96B:                109 * the high bit of the character is set, it means that
C96B:                110 * escape mode should not be exited after execution of
C96B:                111 * the character.
C96B:                112 *
C96B:        C96B    113 ESCCHAR EQU  *
C96B:0C              114         DFB  $0C        ;@: FORMFEED
C96C:1C              115         DFB  $1C        ;A: FS
```

```
C96D:08           116         DFB  $08       ;B: BS
C96E:0A           117         DFB  $0A       ;C: LF
C96F:1F           118         DFB  $1F       ;D: US
C970:1D           119         DFB  $1D       ;E: GS
C971:0B           120         DFB  $0B       ;F: VT
C972:9F           121         DFB  $1F+$80   ;I: US (STAY ESC)
C973:88           122         DFB  $08+$80   ;J: BS (STAY ESC)
C974:9C           123         DFB  $1C+$80   ;K: FS (STAY ESC)
C975:8A           124         DFB  $0A+$80   ;M: LF (STAY ESC)
C976:11           125         DFB  $11       ;4 :DC1
C977:12           126         DFB  $12       ;8 :DC2
C978:88           127         DFB  $08+$80   ;<-:BS (STAY ESC)
C979:8A           128         DFB  $0A+$80   ;DN:LF (STAY ESC)
C97A:9F           129         DFB  $1F+$80   ;UP:US (STAY ESC)
C97B:9C           130         DFB  $1C+$80   ;->:FS (STAY ESC)
C97C:             131 *
C97C:             132         MSB  OFF       ;high bit already masked
C97C:       C97C  133 ESCTAB  EQU  *
C97C:40           134         ASC  '@'
C97D:41           135         ASC  'A'       ;HANDLE OLD ESCAPES
C97E:42           136         ASC  'B'
C97F:43           137         ASC  'C'
C980:44           138         ASC  'D'
C981:45           139         ASC  'E'
C982:46           140         ASC  'F'
C983:49           141         ASC  'I'
C984:4A           142         ASC  'J'
C985:4B           143         ASC  'K'
C986:4D           144         ASC  'M'
C987:34           145         ASC  '4'
C988:38           146         ASC  '8'
C989:08           147         DFB  $08       ;LEFT ARROW
C98A:0A           148         DFB  $0A       ;DOWN ARROW
C98B:0B           149         DFB  $0B       ;UP   ARROW
C98C:15           150         DFB  $15       ;RITE ARROW
C98D:       0011  151 ESCNUM  EQU  *-ESCTAB
C98D:             152         MSB  ON
C98D:             153 *
C98D:             154 * Tack on diag 128K test here
C98D:             155 *
C98D:2C 13 C0     156 STAUX   BIT  RDRAMRD   ;aux done yet?
C990:30 11  C9A3  157         BMI  XSTAUX    ;=>yes, exit
C992:A9 EE        158         LDA  #$EE      ;get test pattern
C994:8D 05 C0     159         STA  WRCARDRAM ;write AUX RAM
C997:8D 03 C0     160         STA  RDCARDRAM ;read AUX RAM
C99A:8D 00 0C     161         STA  $C00      ;test this byte
C99D:8D 00 08     162         STA  $800      ;and this is 1K off
C9A0:CD 00 0C     163         CMP  $C00      ;has $C00 been updated?
C9A3:60           164 XSTAUX  RTS            ;check in main diags.
C9A4:             165 *
C9A4:             166 * ESCOUT used by ESCFIX in $C1 page
C9A4:             167 *
C9A4:             168         MSB  ON
C9A4:CA CB CD C9  169 ESCOUT  ASC  'JKMI'    ;The arrows
```

```
C9A8:             170         MSB  OFF
C9A8:              26         INCLUDE PASCAL
C9A8:               1 ****************************************
C9A8:               2 * PASCAL 1.0 OUTPUT HOOK:
C9A8:               3 ****************************************
C9A8:        0002   4         DS   C80RG+$1AA-*,0
C9AA:        0000   5         IFNE *-C80RG-$1AA
 S                  6         FAIL 2,'C9AA   HOOK ALIGNMENT'
C9AA:               7         FIN
C9AA:AD 7B 06       8         LDA  CHAR      ;GET OUTPUT CHARACTER
C9AD:4C 56 C3       9         JMP  JPWRITE   ;=>USE STANDARD WRITE
C9B0:              10 ****************************************
C9B0:              11 *
C9B0:              12 ****************************************
C9B0:              13 * PASCAL INITIALIZATION:
C9B0:              14 * Disable printing of mouse text
C9B0:              15 ****************************************
C9B0:       C9B0   16 PINIT1.0 EQU *
C9B0:A9 83         17         LDA  #M.PASCAL+M.PAS1.0+M.MOUSE
C9B2:D0 02  C9B6   18         BNE  PINIT2    :=>always
C9B4:       C9B4   19 PINIT   EQU  *
C9B4:A9 81         20         LDA  #M.PASCAL+M.MOUSE ;SAY WE'RE
C9B6:              21 *
C9B6:       C9B6   22 PINIT2  EQU  *
C9B6:48            23         PHA            ;save version ID
C9B7:              24 *
C9B7:              25 * SEE IF THE CARD'S PLUGGED IN:
C9B7:              26 *
C9B7:20 90 CA      27         JSR  TESTCARD  ;IS IT THERE?
C9BA:F0 04  C9C0   28         BEQ  PIGOOD    ;=>YES
C9BC:68            29         PLA            ;discard ID byte
C9BD:A2 09         30         LDX  #9        ;IORESULT='NO DEVICE'
C9BF:60            31         RTS
C9C0:              32 *
C9C0:       C9C0   33 PIGOOD  EQU  *
C9C0:68            34         PLA            ;get version ID
C9C1:8D FB 04      35         STA  MODE      ; and save it
C9C4:8D 01 C0      36         STA  SET80COL  ;ENABLE 80 STORE
C9C7:8D 0D C0      37         STA  SET80VID  ; AND 80 VIDEO
C9CA:8D 0F C0      38         STA  SETALTCHAR ;NORM+INV LCASE
C9CD:20 D4 CE      39         JSR  PSETUP    ;set window and cursor
C9D0:20 90 CC      40         JSR  X.FF      ;HOME & CLEAR IT
C9D3:4C 1F CA      41         JMP  DOBASL    ;fix OLDBASL/H, display cursor, exit
C9D6:              42 ****************************************
C9D6:              43 * PASCAL INPUT:
C9D6:              44 *
C9D6:              45 * Character always returned with high bit clear.
C9D6:              46 *
C9D6:              47 ****************************************
C9D6:       C9D6   48 PREAD   EQU  *
C9D6:20 D4 CE      49         JSR  PSETUP    ;SETUP ZP STUFF
C9D9:20 3B C8      50         JSR  GETKEY    ;GET A KEYSTROKE
C9DC:29 7F         51         AND  #$7F      ;DROP HI BIT
C9DE:8D 7B 06      52         STA  CHAR      ;SAVE THE CHAR
```

```
C9E1:A2 00          53          LDX  #0        ;IORESULT='GOOD'
C9E3:AD FB 04       54          LDA  MODE      ;ARE WE IN 1.0-MODE?
C9E6:29 02          55          AND  #M.PAS1.0
C9E8:F0 02    C9EC  56          BEQ  PREADRET2 ;=>NOPE
C9EA:A2 C3          57          LDX  #<CN00    ;YES, RETURN CN IN X
C9EC:               58 *
C9EC:         C9EC  59 PREADRET2 EQU *
C9EC:AD 7B 06       60          LDA  CHAR      ;RESTORE CHAR
C9EF:60             61          RTS
C9F0:               62 *
C9F0:               63 * PASCAL OUTPUT:
C9F0:               64 * Note:  to be executed, control characters must have
C9F0:               65 * their high bits cleared.  All other characters are
C9F0:               66 * displayed regardless of their high bits.
C9F0:               67 *
C9F0:         C9F0  68 PWRITE  EQU  *
C9F0:29 7F          69          AND  #$7F      ;clear high bits
C9F2:AA             70          TAX            ;save character
C9F3:20 D4 CE       71          JSR  PSETUP    ;SETUP ZP STUFF, don't set ROM
C9F6:A9 08          72          LDA  #M.GOXY   ;ARE WE DOING GOTOXY?
C9F8:2C FB 04       73          BIT  MODE
C9FB:D0 32    CA2F  74          BNE  GETX      ;=>Doing X or Y?
C9FD:8A             75          TXA            ;now check for control char
C9FE:2C 2E CA       76          BIT  PRTS      ;is it control?
CA01:F0 50    CA53  77          BEQ  PCTL      ;=>yes, do control
CA03:AC 7B 05       78          LDY  OURCH     ;get horizontal position
CA06:24 32          79          BIT  INVFLG    ;check for inverse
CA08:10 02    CA0C  80          BPL  PWR1      ;inverse, go store it
CA0A:09 80          81          ORA  #$80
CA0C:20 70 CE       82 PWR1     JSR  STOR1T    ;now store it (erasing cursor)
CA0F:C8             83          INY            ;INC CH
CA10:8C 7B 05       84          STY  OURCH
CA13:C4 21          85          CPY  WNDWDTH
CA15:90 08    CA1F  86          BCC  DOBASL
CA17:A9 00          87          LDA  #0        ;do carriage return
CA19:8D 7B 05       88          STA  OURCH
CA1C:20 D8 CB       89          JSR  X.LF      ;and linefeed
CA1F:A5 28          90 DOBASL   LDA  BASL      ;save BASL for pascal
CA21:8D 7B 07       91          STA  OLDBASL
CA24:A5 29          92          LDA  BASH
CA26:8D FB 07       93          STA  OLDBASH
CA29:20 1F CE       94 PWRITERET JSR PAS1NV    ;display new cursor
CA2C:A2 00          95 PRET     LDX  #$0       ;return with no error
CA2E:60             96 PRTS     RTS
CA2F:               97 *
CA2F:               98 *  HANDLE GOTOXY STUFF:
CA2F:               99 *
CA2F:20 1F CE      100 GETX     JSR  PASINV    ;turn off cursor
CA32:8A            101          TXA            ;get character
CA33:38            102          SEC
CA34:E9 20         103          SBC  #32       ;MAKE BINARY
CA36:2C FB 06      104          BIT  XCOORD    ;doing X?
CA39:30 30    CA6B 105          BMI  PSETX     ;=>yes, set it
CA3B:              106 *
```

```
CA3B:              107 * Set Y and do the GOTOXY
CA3B:              108 *
CA3B:8D FB 05      109 GETY     STA  OURCV
CA3E:85 25         110          STA  CV
CA40:20 BA CA      111          JSR  BASCALC   ;calc base addr
CA43:AD FB 06      112          LDA  XCOORD
CA46:8D 7B 05      113          STA  OURCH     ;set cursor horizontal
CA49:A9 F7         114          LDA  #255-M.GOXY ;turn off gotoxy
CA4B:2D FB 04      115          AND  MODE
CA4E:8D FB 04      116          STA  MODE
CA51:D0 CC    CA1F 117          BNE  DOBASL    ;=>DONE (ALWAYS TAKEN)
CA53:              118 *
CA53:20 1F CE      119 PCTL     JSR  PASINV    ;turn off cursor
CA56:8A            120          TXA            ;get char
CA57:C9 1E         121          CMP  #$1E      ;is it gotoXY?
CA59:F0 06    CA61 122          BEQ  STARTXY   ;=>yes, start it up
CA5B:20 D6 CA      123          JSR  CTLCHAR   ;EXECUTE IT IF POSSIBLE
CA5E:4C 1F CA      124          JMP  DOBASL    ;=>update BASL/H, cursor, exit
CA61:              125 *
CA61:              126 * START THE GOTOXY SEQUENCE:
CA61:              127 *
CA61:         CA61 128 STARTXY EQU  *
CA61:A9 08         129          LDA  #M.GOXY
CA63:0D FB 04      130          ORA  MODE      ;turn on gotoxy
CA66:8D FB 04      131          STA  MODE
CA69:A9 FF         132          LDA  #$FF      ;set XCOORD to -1
CA6B:8D FB 06      133 PSETX    STA  XCOORD    ;set X
CA6E:4C 29 CA      134          JMP  PWRITERET ;=>display cursor and exit
CA71:               27          INCLUDE SUBS1
CA71:         CA71   1 DOMN     EQU  *
CA71:AA             2          TAX            ;SAVE IT
CA72:A5 2A          3          LDA  BAS2L     ;GET OPCODE AGAIN
CA74:A0 03          4          LDY  #$03
CA76:E0 8A          5          CPX  #$8A
CA78:F0 0B    CA85  6          BEQ  MNNDX3
CA7A:4A             7 MNNDX1   LSR  A
CA7B:90 08    CA85  8          BCC  MNNDX3    ;FORM INDEX INTO MNEMONIC TABLE
CA7D:4A             9          LSR  A
CA7E:4A            10 MNNDX2   LSR  A          ;  1) 1XXX1010 => 00101XXX
CA7F:09 20         11          ORA  #$20      ;  2) XXXYYY01 => 00111XXX
CA81:88            12          DEY            ;  3) XXXYYY10 => 00110XXX
CA82:D0 FA    CA7E 13          BNE  MNNDX2    ;  4) XXXYY100 => 00100XXX
CA84:C8            14          INY            ;  5) XXXXX000 => 000XXXXX
CA85:88            15 MNNDX3   DEY
CA86:D0 F2    CA7A 16          BNE  MNNDX1
CA88:60            17          RTS
CA89:              18 *
CA89:              19 * Switch in slot 3, then test for a ROM card.
CA89:              20 * If none found, test for 80 column card,
CA89:              21 * else return with BNE.
CA89:              22 *
CA89:         CA89 23 TSTROMCRD EQU *
CA89:20 B7 F8      24          JSR  TSTROM    ;test for ROM card
CA8C:D0 02    CA90 25          BNE  TESTCARD  ;=>no ROM, check for 80 column card
```

```
CA8E:C8              26          INY             ;make BNE for return
CA8F:60              27          RTS
CA90:                28 *
CA90:                29 ****************************************
CA90:                30 * NAME     : TESTCARD
CA90:                31 * FUNCTION: SEE IF 80COL CARD PLUGGED IN
CA90:                32 * INPUT    : NONE
CA90:                33 * OUTPUT   : 'BEQ' IF CARD AVAILABLE
CA90:                34 *          : 'BNE' IF NOT
CA90:                35 * VOLATILE: AC,Y
CA90:                36 ****************************************
CA90:                37 *
CA90:        CA90    38 TESTCARD EQU *
CA90:AD 1C C0        39          LDA  RDPAGE2    ;REMEMBER CURRENT VIDEO DISPLAY
CA93:0A              40          ASL  A          ; IN THE CARRY
CA94:A9 88           41          LDA  #$88       ;USEFUL CHAR FOR TESTING
CA96:2C 18 C0        42          BIT  RD80COL    ;REMEMBER VIDEO MODE IN 'N'
CA99:8D 01 C0        43          STA  SET80COL   ;ENABLE 80COL STORE
CA9C:08              44          PHP             ;SAVE 'N' AND 'C' FLAGS
CA9D:8D 55 C0        45          STA  TXTPAGE2   ;SET PAGE2
CAA0:AC 00 04        46          LDY  $0400      ;GET FIRST CHAR
CAA3:8D 00 04        47          STA  $0400      ;SET TO A '*'
CAA6:AD 00 04        48          LDA  $0400      ;GET IT BACK FROM RAM
CAA9:8C 00 04        49          STY  $0400      ;RESTORE ORIG CHAR
CAAC:28              50          PLP             ;RESTORE 'N' AND 'C' FLAGS
CAAD:B0 03   CAB2    51          BCS  STAY2      ;STAY IN PAGE2
CAAF:8D 54 C0        52          STA  TXTPAGE1   ;RESTORE PAGE1
CAB2:        CAB2    53 STAY2    EQU  *
CAB2:30 03   CAB7    54          BMI  STAY80     ;=>STAY IN 80COL MODE
CAB4:8D 00 C0        55          STA  CLR80COL   ;TURN OFF 80COL STORE
CAB7:        CAB7    56 STAY80   EQU  *
CAB7:C9 88           57          CMP  #$88       ;WAS CHAR VALID?
CAB9:60              58          RTS             ;RETURN RESULT AS BEQ/BNE
CABA:                59 *
CABA:                60 * Do the
 normal monitor ROM BASCALC
CABA:                61 *
CABA:        CABA    62 BASCALC EQU  *
CABA:48              63          PHA
CABB:4A              64          LSR  A
CABC:29 03           65          AND  #$03
CABE:09 04           66          ORA  #$04
CAC0:85 29           67          STA  BASH
CAC2:68              68          PLA
CAC3:29 18           69          AND  #$18
CAC5:90 02   CAC9    70          BCC  BSCLC2
CAC7:69 7F           71          ADC  #$7F
CAC9:85 28           72 BSCLC2   STA  BASL
CACB:0A              73          ASL  A
CACC:0A              74          ASL  A
CACD:05 28           75          ORA  BASL
CACF:85 28           76          STA  BASL
CAD1:60              77          RTS
CAD2:                78 *
```

```
CAD2:                79 ****************************************
CAD2:                80 * NAME     : CTLCHAR0
CAD2:                81 * FUNCTION: Execute CTL char if M.CTL=0
CAD2:                82 * INPUT    : AC=CHAR
CAD2:                83 * OUTPUT   : 'BCS' if not executed
CAD2:                84 *          : 'BCC' if executed
CAD2:                85 * VOLATILE: NOTHING
CAD2:                86 * CALLS    : MANY THINGS
CAD2:                87 ****************************************
CAD2:                88 *
CAD2:2C 06 CB        89 CTLCHAR0 BIT SEV1        ;set V (use M.CTL)
CAD5:50 FE   CAD5    90          BVC  *          ;skip CLC
CAD6:        CAD6    91          ORG  *-1
CAD6:                92 *
CAD6:                93 ****************************************
CAD6:                94 * NAME     : CTLCHAR
CAD6:                95 * FUNCTION: Always execute CTL char
CAD6:                96 * INPUT    : AC=CHAR
CAD6:                97 * OUTPUT   : 'BCS' if not executed
CAD6:                98 *          : 'BCC' if ctl executed
CAD6:                99 * VOLATILE: NOTHING
CAD6:               100 * CALLS    : MANY THINGS
CAD6:               101 ****************************************
CAD6:               102 *
CAD6:B8             103 CTLCHAR CLV             ;clear V (ignore M.CTL)
CAD7:8D 7B 07       104          STA  TEMP1     ;TEMP SAVE OF CHAR
CADA:48             105          PHA            ;SAVE AC
CADB:98             106          TYA            ;SAVE Y
CADC:48             107          PHA
CADD:               108 *
CADD:AC 7B 07       109          LDY  TEMP1     ;GET CHAR IN QUESTION
CAE0:C0 05          110          CPY  #$05      ;IS IT NUL..EOT?
CAE2:90 13   CAF7   111          BCC  CTLCHARX  ;=>YES, NOT USED
CAE4:B9 B4 CB       112          LDA  CTLADH-5,Y ;Get high byte of address
CAE7:F0 0E   CAF7   113          BEQ  CTLCHARX  ;=>ctl not implemented
CAE9:50 12   CAFD   114          BVC  CTLG00    ;=> CLTCHAR: always execute
CAEB:               115 *
CAEB:        0000   116          DO   TEST
 S                  117          BPL  CTLG00    ;=>CR,BEL,LF,BS always done
CAEB:               118          ELSE
CAEB:30 10   CAFD   119          BMI  CTLG00    ;=>CR,BEL,LF,BS always done
CAED:               120          FIN
CAED:               121 *
CAED:8D 7B 07       122          STA  TEMP1     ;save high byte of address
CAF0:AD FB 04       123          LDA  MODE      ;if control chars
CAF3:29 28          124          AND  #M.CTL+M.CTL2 ;are enabled
CAF5:F0 03   CAFA   125          BEQ  CTLG0     ;=>then go do them
CAF7:               126 *
CAF7:?       CAF7   127 CTLCHARX EQU *
CAF7:38             128          SEC            ;SAY 'NOT CTL'
CAF8:B0 09   CB03   129          BCS  CTLRET    ;=>DONE
CAFA:               130 *
CAFA:AD 7B 07       131 CTLG0   LDA  TEMP1      ;get address back
CAFD:        CAFD   132 CTLG00  EQU  *
```

```
CAFD:          0000  133          DO   TEST
 S                   134          AND  #$7F       ;for test, hi bit clear
CAFD:                135          ELSE
CAFD:09 80           136          ORA  #$80       ;hi bit always set
CAFF:                137          FIN
CAFF:20 07 CB        138          JSR  CTLXFER    ;EXECUTE SUBROUTINE
CB02:                139 *
CB02:18              140          CLC             ;SAY 'CTL CHAR EXECUTED'
CB03:          CB03  141 CTLRET   EQU  *
CB03:68              142          PLA             ;RESTORE
CB04:A8              143          TAY             ; Y
CB05:68              144          PLA             ;  AND AC
CB06:60              145 SEV1     RTS
CB07:                146 *
CB07:          CB07  147 CTLXFER  EQU  *
CB07:48              148          PHA             ;PUSH ONTO STACK FOR
CB08:B9 99 CB        149          LDA  CTLADL-5,Y ; TRANSFER TRICK
CB08:48              150          PHA
CB0C:60              151          RTS             ;XFER TO ROUTINE
CB0D:                152 *
CB0D:                153 * Turn cursor on for Pascal only
CB0D:                154 *
CB0D:AD FB 04        155 X.CUR.ON LDA MODE        ;get mode byte
CB10:10 05     CB17  156          BPL  CURON.X    ;=>not pascal, don't do it
CB12:29 EF           157          AND  #255-M.CURSOR ;clear cursor bit
CB14:8D FB 04        158 SAVCUR   STA  MODE       ;save it
CB17:60              159 CURON.X  RTS             ;and exit
CB18:                160 *
CB18:                161 * Turn cursor off for Pascal only.
CB18:                162 * Cursor is not displayed during call.
CB18:                163 *
CB18:AD FB 04        164 X.CUR.OFF LDA MODE       ;get mode byte
CB1B:10 FA     CB17  165          BPL  CURON.X    ;=>not pascal, don't do it
CB1D:09 10           166          ORA  #M.CURSOR  ;turn on cursor bit
CB1F:D0 F3     CB14  167          BNE  SAVCUR     ;save and exit
CB21:                168 *
CB21:                169 * EXECUTE BELL:
CB21:                170 *
CB21:          CB21  171 X.BELL   EQU  *
CB21:A9 40           172          LDA  #$40       ;RIPPED OFF FROM MONITOR
CB23:20 34 CB        173          JSR  WAIT
CB26:A0 C0           174          LDY  #$C0
CB28:A9 0C           175 BELL2    LDA  #$0C
CB2A:20 34 CB        176          JSR  WAIT
CB2D:AD 30 C0        177          LDA  SPKR
CB30:88              178          DEY
CB31:D0 F5     CB28  179          BNE  BELL2
CB33:60              180          RTS
CB34:                181 *
CB34:          CB34  182 WAIT     EQU  *          ;RIPPED OFF FROM MONITOR ROM
CB34:38              183          SEC
CB35:48              184 WAIT2    PHA
CB36:E9 01           185 WAIT3    SBC  #1
CB38:D0 FC     CB36  186          BNE  WAIT3
CB3A:68              187          PLA
CB3B:E9 01           188          SBC  #1
CB3D:D0 F6     CB35  189          BNE  WAIT2
CB3F:60              190          RTS
CB40:                191 *
CB40:                192 * EXECUTE BACKSPACE:
CB40:                193 *
CB40:          CB40  194 X.BS     EQU  *
CB40:CE 7B 05        195          DEC  OURCH      ;BACK UP CH
CB43:10 0B     CB50  196          BPL  BSDONE     ;=>DONE
CB45:A5 21           197          LDA  WNDWDTH    ;BACK UP TO PRIOR LINE
CB47:8D 7B 05        198          STA  OURCH      ;SET CH
CB4A:CE 7B 05        199          DEC  OURCH
CB4D:20 79 CB        200          JSR  X.US       ;NOW DO REV LINEFEED
CB50:          CB50  201 BSDONE   EQU  *
CB50:60              202          RTS
CB51:                203 *
CB51:                204 * EXECUTE CARRIAGE RETURN:
CB51:                205 *
CB51:          CB51  206 X.CR     EQU  *
CB51:A9 00           207          LDA  #0         ;BACK UP CH TO
CB53:8D 7B 05        208          STA  OURCH      ; BEGINNING OF LINE
CB56:AD FB 04        209          LDA  MODE       ;ARE WE IN BASIC?
CB59:30 03     CB5E  210          BMI  X.CRRET    ;=> Pascal, avoid auto LF
CB5B:20 D8 CB        211          JSR  X.LF       ;EXECUTE AUTO LF FOR BASIC
CB5E:          CB5E  212 X.CRRET  EQU  *
CB5E:60              213          RTS
CB5F:                214 *
CB5F:                215 * EXECUTE HOME:
CB5F:                216 *
CB5F:          CB5F  217 X.EM     EQU  *
CB5F:A5 22           218          LDA  WNDTOP
CB61:85 25           219          STA  CV
CB63:A9 00           220          LDA  #0
CB65:8D 7B 05        221          STA  OURCH      ;STUFF CH
CB68:4C FE CD        222          JMP  VTAB       ;set base for OURCV
CB6B:                223 *
CB6B:                224 * EXECUTE FORWARD SPACE:
CB6B:                225 *
CB6B:          CB6B  226 X.FS     EQU  *
CB6B:EE 7B 05        227          INC  OURCH      ;BUMP CH
CB6E:AD 7B 05        228          LDA  OURCH      ;GET THE POSITION
CB71:C5 21           229          CMP  WNDWDTH    ;OFF THE RIGHT SIDE?
CB73:90 03     CB78  230          BCC  X.FSRET    ;=>NO, GOOD
CB75:20 51 CB        231          JSR  X.CR       ;=>YES, WRAP AROUND
CB78:                232 *
CB78:          CB78  233 X.FSRET  EQU  *
CB78:60              234          RTS
CB79:                235 *
CB79:                236 * EXECUTE REVERSE LINEFEED:
CB79:                237 *
CB79:A5 22           238 X.US     LDA  WNDTOP     ;are we at top?
CB7B:C5 25           239          CMP  CV
CB7D:B0 1E     CB9D  240          BCS  X.USRET    ;=>yes, stay there
```

```
CB7F:C6 25      241         DEC  CV        ;else go up a line
CB81:4C FE CD   242         JMP  VTAB      ;exit thru VTAB (update OURCV)
CB84:           243 *
CB84:           244 * EXECUTE "NORMAL VIDEO"
CB84:           245 *
CB84:      CB84 246 X.SO    EQU  *
CB84:AD FB 04   247         LDA  MODE      ;SET MODE BIT
CB87:10 02 CB8B 248         BPL  X.SO1     ;don't set mode for BASIC
CB89:29 FB      249         AND  #255-M.VMODE ;SET 'NORMAL'
CB8B:A0 FF      250 X.SO1   LDY  #255
CB8D:D0 09 CB98 251         BNE  STUFFINV  ;(ALWAYS)
CB8F:           252 *
CB8F:           253 * EXECUTE "INVERSE VIDEO"
CB8F:           254 *
CB8F:      CB8F 255 X.SI    EQU  *
CB8F:AD FB 04   256         LDA  MODE      ;SET MODE BIT
CB92:10 02 CB96 257         BPL  X.SI1     ;don't set mode for BASIC
CB94:09 04      258         ORA  #M.VMODE  ;SET 'INVERSE'
CB96:A0 7F      259 X.SI1   LDY  #127
CB98:8D FB 04   260 STUFFINV STA MODE      ;SET MODE
CB9B:84 32      261         STY  INVFLG    ;STUFF FLAG TOO
CB9D:60         262 X.USRET RTS
CB9E:           263 *
CB9E:      CB9E 264 CTLADL  EQU  *
CB9E:0C         265         DFB  #>X.CUR.ON-1 ;ENQ
CB9F:17         266         DFB  #>X.CUR.OFF-1 ;ACK
CBA0:20         267         DFB  #>X.BELL-1 ;BEL
CBA1:3F         268         DFB  #>X.BS-1   ;BS
CBA2:00         269         DFB  0          ;HT
CBA3:D7         270         DFB  #>X.LF-1   ;LF
CBA4:73         271         DFB  #>X.VT-1   ;VT
CBA5:8F         272         DFB  #>X.FF-1   ;FF
CBA6:50         273         DFB  #>X.CR-1   ;CR
CBA7:83         274         DFB  #>X.SO-1   ;SO
CBA8:8E         275         DFB  #>X.SI-1   ;SI
CBA9:00         276         DFB  0          ;DLE
CBAA:E9         277         DFB  #>X.DC1-1  ;DC1
CBAB:FB         278         DFB  #>X.DC2-1  ;DC2
CBAC:00         279         DFB  0          ;DC3
CBAD:00         280         DFB  0          ;DC4
CBAE:4C         281         DFB  #>X.NAK-1  ;NAK
CBAF:D3         282         DFB  #>SCROLLDN-1 ;SYN
CBB0:EA         283         DFB  #>SCROLLUP-1 ;ETB
CBB1:3C         284         DFB  #>MOUSEOFF-1
CBB2:5E         285         DFB  #>X.EM-1   ;EM
CBB3:95         286         DFB  #>X.SUB-1  ;SUB
CBB4:43         287         DFB  #>MOUSEON-1
CBB5:6A         288         DFB  #>X.FS-1   ;FS
CBB6:99         289         DFB  #>X.GS-1   ;GS
CBB7:00         290         DFB  0          ;RS
CBB8:78         291         DFB  #>X.US-1   ;US
CBB9:           292 *
CBB9:      CBB9 293 CTLADH  EQU  *
CBB9:4B         294         DFB  #<X.CUR.ON-$8001 ;ENQ
CBBA:4B         295         DFB  #<X.CUR.OFF-$8001 ;ACK
CBBB:CB         296         DFB  #<X.BELL-1 ;BEL
CBBC:CB         297         DFB  #<X.BS-1   ;BS
CBBD:00         298         DFB  0          ;HT
CBBE:CB         299         DFB  #<X.LF-1   ;LF
CBBF:4C         300         DFB  #<X.VT-$8001 ;VT
CBC0:4C         301         DFB  #<X.FF-$8001 ;FF
CBC1:CB         302         DFB  #<X.CR-1   ;CR
CBC2:4B         303         DFB  #<X.SO-$8001 ;SO
CBC3:4B         304         DFB  #<X.SI-$8001 ;SI
CBC4:00         305         DFB  0          ;DLE
CBC5:4C         306         DFB  #<X.DC1-$8001 ;DC1
CBC6:4C         307         DFB  #<X.DC2-$8001 ;DC2
CBC7:00         308         DFB  0          ;DC3
CBC8:00         309         DFB  0          ;DC4
CBC9:4D         310         DFB  #<X.NAK-$8001 ;NAK
CBCA:4B         311         DFB  #<SCROLLDN-$8001 ;SYN
CBCB:4B         312         DFB  #<SCROLLUP-$8001 ;ETB
CBCC:4D         313         DFB  #<MOUSEOFF-$8001
CBCD:4B         314         DFB  #<X.EM-$8001 ;EM
CBCE:4C         315         DFB  #<X.SUB-$8001 ;SUB
CBCF:4D         316         DFB  #<MOUSEON-$8001
CBD0:4B         317         DFB  #<X.FS-$8001 ;FS
CBD1:4C         318         DFB  #<X.GS-$8001 ;GS
CBD2:00         319         DFB  0          ;RS
CBD3:4B         320         DFB  #<X.US-$8001 ;US
CBD4:            28         INCLUDE SUBS2
CBD4:             1 *
CBD4:             2 * SCROLLIT scrolls the screen either up or down, depending
CBD4:             3 * on the value of X.  It scrolls within windows with even
CBD4:             4 * or odd edges for both 40 and 80 columns.  It can scroll
CBD4:             5 * windows down to 1 characters wide.
CBD4:             6 *
CBD4:A0 00        7 SCROLLDN LDY #0          ;direction = down
CBD6:F0 15 CBED   8         BEQ  SCROLLIT   ;=>go do scroll
CBD8:             9 *
CBD8:            10 * EXECUTE LINEFEED:
CBD8:            11 *
CBD8:      CBD8  12 X.LF    EQU  *
CBD8:E6 25       13         INC  CV
CBDA:A5 25       14         LDA  CV         ;SEE IF OFF BOTTOM
CBDC:8D FB 05    15         STA  OURCV
CBDF:C5 23       16         CMP  WNDBTM     ;OFF THE END?
CBE1:B0 03 CBE6  17         BCS  X.LF2      ;=>yes, scroll screen
CBE3:4C 03 CE    18         JMP  VTABZ      ;exit thru VTABZ
CBE6:            19 *
CBE6:      CBE6  20 X.LF2   EQU  *
CBE6:CE FB 05    21         DEC  OURCV      ;back up to bottom
CBE9:C6 25       22         DEC  CV         ;and fall into scroll
CBEB:            23 *
CBEB:A0 01       24 SCROLLUP LDY #1         ;direction = up
CBED:8A          25 SCROLLIT TXA            ;save X
CBEE:48          26         PHA
CBEF:8C 7B 07    27         STY  TEMP1      ;save direction
```

```
CBF2:A5 21          28          LDA  WNDWDTH   ;get width of screen window
CBF4:48             29          PHA            ;save original width
CBF5:2C 1F C0       30          BIT  RD80VID   ;in 40 or 80 columns?
CBF8:10 1C   CC16   31          BPL  GETST1    ;=>40, determine starting line
CBFA:8D 01 C0       32          STA  SET80COL  ;make sure this is enabled
CBFD:4A             33          LSR  A         ;divide by 2 for 80 column index
CBFE:AA             34          TAX            ;and save
CBFF:A5 20          35          LDA  WNDLFT    ;test oddity of right edge
CC01:4A             36          LSR  A         ;by rotating low bit into carry
CC02:B8             37          CLV            ;V=0 if left edge even
CC03:90 03   CC08   38          BCC  CHKRT     ;=>check right edge
CC05:2C 06 CB       39          BIT  SEV1      ;V=1 if left edge odd
CC08:2A             40 CHKRT    ROL  A         ;restore WNDLFT
CC09:45 21          41          EOR  WNDWDTH   ;get oddity of right edge
CC0B:4A             42          LSR  A         ;C=1 if right edge even
CC0C:70 03   CC11   43          BVS  GETST     ;if odd left, don't DEY
CC0E:B0 01   CC11   44          BCS  GETST     ;if even right, don't DEY
CC10:CA             45          DEX            ;if right edge odd, need one less
CC11:86 21          46 GETST    STX  WNDWDTH   ;save window width
CC13:AD 1F C0       47          LDA  RD80VID   ;N=1 if 80 columns
CC16:08             48 GETST1   PHP            ;save N,Z,V
CC17:A6 22          49          LDX  WNDTOP    ;assume scroll from top
CC19:98             50          TYA            ;up or down?
CC1A:D0 03   CC1F   51          BNE  SETDBAS   ;=>up
CC1C:A6 23          52          LDX  WNDBTM    ;down, start scrolling at bottom
CC1E:CA             53          DEX            ;really need one less
CC1F:               54 *
CC1F:8A             55 SETDBAS  TXA            ;get current line
CC20:20 03 CE       56          JSR  VTABZ     ;calculate base with window width
CC23:               57 *
CC23:A5 28          58 SCRLIN   LDA  BASL      ;current line is destination
CC25:85 2A          59          STA  BAS2L
CC27:A5 29          60          LDA  BASH
CC29:85 2B          61          STA  BAS2H
CC2B:               62 *
CC2B:AD 7B 07       63          LDA  TEMP1     ;test direction
CC2E:F0 32   CC62   64          BEQ  SCRLDN    ;=>do the downer
CC30:E8             65          INX            ;do next line
CC31:E4 23          66          CPX  WNDBTM    ;done yet?
CC33:B0 32   CC67   67          BCS  SCRLL3    ;=>yup, all done
CC35:8A             68 SETSRC   TXA            ;set new line
CC36:20 03 CE       69          JSR  VTABZ     ;get base for new current line
CC39:A4 21          70          LDY  WNDWDTH   ;get width for scroll
CC3B:28             71          PLP            ;get status for scroll
CC3C:08             72          PHP            ;N=1 if 80 columns
CC3D:10 1E   CC5D   73          BPL  SKPRT     ;=>only do 40 columns
CC3F:AD 55 C0       74          LDA  TXTPAGE2  ;scroll aux page first (even bytes)
CC42:98             75          TYA            ;test Y
CC43:F0 07   CC4C   76          BEQ  SCRLFT    ;if Y=0, only scroll one byte
CC45:B1 28          77 SCRLEVEN LDA  (BASL),Y
CC47:91 2A          78          STA  (BAS2L),Y
CC49:88             79          DEY
CC4A:D0 F9   CC45   80          BNE  SCRLEVEN  ;do all but last even byte
CC4C:70 04   CC52   81 SCRLFT   BVS  SKPLFT    ;odd left edge, skip this byte
CC4E:B1 28          82          LDA  (BASL),Y
CC50:91 2A          83          STA  (BAS2L),Y
CC52:AD 54 C0       84 SKPLFT   LDA  TXTPAGE1  ;now do main page (odd bytes)
CC55:A4 21          85          LDY  WNDWDTH   ;restore width
CC57:B0 04   CC5D   86          BCS  SKPRT     ;even right edge, skip this byte
CC59:B1 28          87 SCRLODD  LDA  (BASL),Y
CC5B:91 2A          88          STA  (BAS2L),Y
CC5D:88             89 SKPRT    DEY
CC5E:10 F9   CC59   90          BPL  SCRLODD
CC60:30 C1   CC23   91          BMI  SCRLIN    ;=> always scroll next line
CC62:               92 *
CC62:CA             93 SCRLDN   DEX            ;do next line
CC63:E4 22          94          CPX  WNDTOP    ;done yet
CC65:10 CE   CC35   95          BPL  SETSRC    ;=>nope, not yet
CC67:               96 *
CC67:28             97 SCRLL3   PLP            ;pull status off stack
CC68:68             98          PLA            ;restore window width
CC69:85 21          99          STA  WNDWDTH
CC6B:20 96 CC      100          JSR  X.SUB     ;clear current line
CC6E:20 FE CD      101          JSR  VTAB      ;restore original cursor line
CC71:68            102          PLA            ;and X
CC72:AA            103          TAX
CC73:60            104          RTS            ;done!!!
CC74:              105 *
CC74:              106 * EXECUTE CLR TO EOS:
CC74:              107 *
CC74:20 9A CC      108 X.VT    JSR  X.GS      ;CLEAR TO EOL
CC77:A5 25         109          LDA  CV        ;SAVE CV
CC79:48            110          PHA
CC7A:10 06   CC82  111          BPL  X.VTNEXT  ;DO NEXT LINE (ALWAYS TAKEN)
CC7C:20 03 CE      112 X.VTLOOP JSR  VTABZ     ;set base address
CC7F:20 96 CC      113          JSR  X.SUB     ;CLEAR LINE
CC82:E6 25         114 X.VTNEXT INC  CV
CC84:A5 25         115          LDA  CV
CC86:C5 23         116          CMP  WNDBTM    ;OFF SCREEN?
CC88:90 F2   CC7C  117          BCC  X.VTLOOP  ;=>NO, KEEP GOING
CC8A:68            118          PLA            ;RESTORE
CC8B:85 25         119          STA  CV        ; CV
CC8D:4C FE CD      120          JMP  VTAB      ;return via VTAB (blech)
CC90:              121 *
CC90:              122 * EXECUTE CLEAR:
CC90:              123 *
CC90:       CC90   124 X.FF     EQU  *
CC90:20 5F CB      125          JSR  X.EM      ;HOME THE CURSOR
CC93:4C 74 CC      126          JMP  X.VT      ;RETURN VIA CLREOS (UGH!)
CC96:              127 *
CC96:              128 * EXECUTE CLEAR LINE
CC96:              129 *
CC96:A0 00         130 X.SUB   LDY  #0        ;start at left
CC98:F0 03   CC9D  131          BEQ  X.GSEOLZ  ;and clear to end of line
CC9A:              132 *
CC9A:              133 * EXECUTE CLEAR TO EOL:
CC9A:              134 *
CC9A:AC 7B 05      135 X.GS    LDY  OURCH     ;get CH
```

```
CC9D:A5 32      136 X.GSEOLZ LDA INVFLG    ;mask blank
CC9F:29 80      137          AND #$80      ;with high bit of invflg
CCA1:09 20      138          ORA #$20      ;make it a blank
CCA3:2C 1F C0   139          BIT RD80VID   ;is it 80 columns?
CCA6:30 15 CCBD 140          BMI CLR80     ;=>yes do quick clear
CCA8:91 28      141 CLR40    STA (BASL),Y
CCAA:C8         142          INY
CCAB:C4 21      143          CPY WNDWDTH
CCAD:90 F9 CCA8 144          BCC CLR40
CCAF:60         145          RTS
CCB0:           146 *
CCB0:           147 * Clear right half of screen for 40 to 80
CCB0:           148 * screen conversion
CCB0:           149 *
CCB0:86 2A      150 CLRHALF STX BAS2L     ;save X
CCB2:A2 D8      151         LDX #$D8      ;set horizontal counter
CCB4:A0 14      152         LDY #20
CCB6:A5 32      153         LDA INVFLG    ;set (inverse) blank
CCB8:29 A0      154         AND #$A0
CCBA:4C D5 CC   155         JMP CLR2
CCBD:           156 *
CCBD:           157 * Clear to end of line for 80 columns
CCBD:           158 *
CCBD:86 2A      159 CLR80   STX BAS2L     ;save X
CCBF:48         160         PHA           ;and blank
CCC0:98         161         TYA           ;get count for CH
CCC1:48         162         PHA           ;save for left edge check
CCC2:38         163         SEC           ;count=WNDWDTH-Y-1
CCC3:E5 21      164         SBC WNDWDTH
CCC5:AA         165         TAX           ;save CH counter
CCC6:98         166         TYA           ;div CH by 2 for half pages
CCC7:4A         167         LSR A
CCC8:A8         168         TAY
CCC9:68         169         PLA           ;restore original ch
CCCA:45 20      170         EOR WNDLFT    ;get starting page
CCCC:6A         171         ROR A
CCCD:B0 03 CCD2 172         BCS CLR0
CCCF:10 01 CCD2 173         BPL CLR0
CCD1:C8         174         INY           ;iff WNDLFT odd, starting byte odd
CCD2:68         175 CLR0    PLA           ;get blank
CCD3:B0 0B CCE0 176         BCS CLR1      ;starting page is 1 (default)
CCD5:2C 55 C0   177 CLR2    BIT TXTPAGE2  ;else do page 2
CCD8:91 28      178         STA (BASL),Y
CCDA:2C 54 C0   179         BIT TXTPAGE1  ;now do page 1
CCDD:E8         180         INX
CCDE:F0 06 CCE6 181         BEQ CLR3      ;all done
CCE0:91 28      182 CLR1    STA (BASL),Y
CCE2:C8         183         INY           ;forward 2 columns
CCE3:E8         184         INX           ;next ch
CCE4:D0 EF CCD5 185         BNE CLR2      ;not done yet
CCE6:A6 2A      186 CLR3    LDX BAS2L     ;restore X
CCE8:38         187         SEC           ;good exit condition
CCE9:60         188         RTS           ;and return
CCEA:           189 *
```

```
CCEA:           190 * EXECUTE '40COL MODE':
CCEA:           191 *
CCEA:      CCEA 192 X.DC1   EQU *
CCEA:AD FB 04   193         LDA MODE      ;don't convert if Pascal
CCED:30 4D
  CD3C  194      BMI X.DC1RTS  ;=>it's Pascal
CCEF:20 31 CD   195 X.DC1A  JSR SETTOP    ;set top of window (0 or 20)
CCF2:2C 1F C0   196         BIT RD80VID   ;are we in 80 columns?
CCF5:10 12 CD09 197         BPL X.DC1B    ;=>no, no convert needed
CCF7:20 91 CD   198         JSR SCRN84    ;else convert 80 to 40
CCFA:90 0D CD09 199         BCC X.DC1B    ;=>always set new window
CCFC:           200 *
CCFC:           201 * Set 80 column mode
CCFC:           202 *
CCFC:      CCFC 203 X.DC2   EQU *
CCFC:20 90 CA   204         JSR TESTCARD  ;is there an 80 column card?
CCFF:D0 3B CD3C 205         BNE X.DC1RTS  ;=>no, can't do this
CD01:2C 1F C0   206         BIT RD80VID   ;are we in 40 columns?
CD04:30 03 CD09 207         BMI X.DC1B    ;=>no, no convert needed
CD06:20 C4 CD   208         JSR SCRN48    ;else convert 40 to 80
CD09:           209 *
CD09:AD 7B 05   210 X.DC1B  LDA OURCH     ;get cursor
CD0C:18         211         CLC           ;since new window left = 0
CD0D:65 20      212         ADC WNDLFT    ;NEWCH=OLDCH+OLDWNDLFT
CD0F:2C 1F C0   213         BIT RD80VID   ;in 80 columns?
CD12:30 06 CD1A 214         BMI X.DC1C    ;=>yes, CH is ok
CD14:C9 28      215         CMP #40       ;else if CH is too big,
CD16:90 02 CD1A 216         BCC X.DC1C    ;set it to 39
CD18:A9 27      217         LDA #39
CD1A:8D 7B 05   218 X.DC1C  STA OURCH     ;save new CH
CD1D:85 24      219         STA CH
CD1F:A5 25      220         LDA CV        ;base
CD21:20 BA CA   221         JSR BASCALC
CD24:2C 1F C0   222         BIT RD80VID   ;in 80 columns?
CD27:10 05 CD2E 223         BPL D040      ;=>no, set forty column window
CD29:           224 *
CD29:20 71 CD   225 D080    JSR FULL80    ;set 80 column window
CD2C:F0 03 CD31 226         BEQ SETTOP    ;=>always branch
CD2E:           227 *
CD2E:20 6D CD   228 D040    JSR FULL40    ;set 40 column window
CD31:A9 00      229 SETTOP  LDA #0        ;assume normal window
CD33:2C 1A C0   230         BIT RDTEXT    ;text or mixed?
CD36:30 02 CD3A 231         BMI D040A     ;=>text, all ok
CD38:A9 14      232         LDA #20
CD3A:85 22      233 D040A   STA WNDTOP    ;set new top
CD3C:60         234 X.DC1RTS RTS
CD3D:           235 *
CD3D:           236 * EXECUTE MOUSE TEXT OFF
CD3D:           237 *
CD3D:AD FB 04   238 MOUSEOFF LDA MODE
CD40:09 01      239         ORA #M.MOUSE  ;set mouse bit
CD42:D0 05 CD49 240         BNE SMOUSE    ;to disable mouse chars
CD44:           241 *
CD44:           242 * EXECUTE MOUSE TEXT ON
```

```
CD44:                 243 *
CD44:AD FB 04         244 MOUSEON LDA  MODE
CD47:29 FE            245         AND  #255-M.MOUSE ;clear mouse bit
CD49:8D FB 04         246 SMOUSE  STA  MODE       ;to enable mouse chars
CD4C:60               247         RTS
CD4D:                 248 *
CD4D:                 249 * EXECUTE 'QUIT':
CD4D:                 250 *
CD4D:         CD4D    251 X.NAK   EQU  *
CD4D:AD FB 04         252         LDA  MODE       ;ONLY VALID IN BASIC
CD50:30 1A    CD6C    253         BMI  SKRTS      ;ignore if pascal
CD52:20 2E CD         254         JSR  D040       ;force 40 column window
CD55:20 80 CD         255         JSR  QUIT       ;do stuff used by PR#0
CD58:20 64 CD         256         JSR  SETCOUT1   ;set output hook
CD5B:                 257 *
CD5B:A9 FD            258 SETKEYIN LDA #<KEYIN    ;set input hook
CD5D:85 39            259         STA  KSWH
CD5F:A9 1B            260         LDA  #>KEYIN
CD61:85 38            261         STA  KSWL
CD63:60               262         RTS
CD64:                 263 *
CD64:A9 FD            264 SETCOUT1 LDA #<COUT1    ;set output hook
CD66:85 37            265         STA  CSWH
CD68:A9 F0            266         LDA  #>COUT1
CD6A:85 36            267         STA  CSWL
CD6C:60               268 SKRTS   RTS
CD6D:                 269 *
CD6D:                 270 ****************************************
CD6D:                 271 * NAME     : FULL40
CD6D:                 272 * FUNCTION: SET FULL 40COL WINDOW
CD6D:                 273 * INPUT    : NONE
CD6D:                 274 * OUTPUT   : WINDOW PARAMETERS, A=0
CD6D:                 275 * VOLATILE: AC
CD6D:                 276 ****************************************
CD6D:                 277 *
CD6D:         CD6D    278 FULL40  EQU  *
CD6D:A9 28            279         LDA  #40        ;set window width to 40
CD6F:D0 02    CD73    280         BNE  SAVWDTH    ;=>(always taken)
CD71:                 281 *
CD71:                 282 ****************************************
CD71:                 283 * NAME     : FULL80
CD71:                 284 * FUNCTION: SET FULL 80COL WINDOW
CD71:                 285 * INPUT    : NONE
CD71:                 286 * OUTPUT   : WINDOW PARAMETERS, A=0
CD71:                 287 * VOLATILE: AC
CD71:                 288 ****************************************
CD71:                 289 *
CD71:A9 50            290 FULL80  LDA  #80        ;set full 80 column window
CD73:85 21            291 SAVWDTH STA  WNDWDTH
CD75:A9 18            292         LDA  #24
CD77:85 23            293         STA  WNDBTM
CD79:A9 00            294         LDA  #0
CD7B:85 22            295         STA  WNDTOP
CD7D:85 20            296         STA  WNDLFT
CD7F:60               297         RTS
CD80:                 298 *
CD80:                 299 * QUIT is used by PR#0 to turn off everything
CD80:                 300 *
CD80:         CD80    301 QUIT    EQU  *
CD80:2C 1F C0         302         BIT  RD80VID    ;were we in 80 columns?
CD83:10 03    CD88    303         BPL  QUIT2      ;=> not a chance
CD85:20 EF CC         304         JSR  X.DC1A     ;switch to 40 columns
CD88:8D 0E C0         305 QUIT2   STA  CLRALTCHAR ;don't use lower case
CD8B:A9 FF            306         LDA  #$FF       ;DESTROY THE
CD8D:8D FB 04         307         STA  MODE       ; MODE BYTE
CD90:60               308         RTS
CD91:                 309 *
CD91:                 310 * SCRN84 and SCRN48 convert screens between 40 & 80 cols.
CD91:                 311 * WNDTOP must be set up to indicate the last line to
CD91:                 312 * be done.  All registers are trashed.
CD91:                 313 *
CD91:8A               314 SCRN84  TXA              ;save X
CD92:48               315         PHA
CD93:A2 17            316         LDX  #23        ;start at bottom of screen
CD95:8D 01 C0         317         STA  SET80COL   ;allow page 2 access
CD98:8A               318 SCR1    TXA             ;calc base for line
CD99:20 BA CA         319         JSR  BASCALC
CD9C:A0 27            320         LDY  #39        ;start at right of screen
CD9E:84 2A            321 SCR2    STY  BAS2L      ;save 40 index
CDA0:98               322         TYA             ;div by 2 for 80 column index
CDA1:4A               323         LSR  A
CDA2:B0 03    CDA7    324         BCS  SCR3
CDA4:2C 55 C0         325         BIT  TXTPAGE2   ;even column, do page 2
CDA7:A8               326 SCR3    TAY             ;get 80 index
CDA8:B1 28            327         LDA  (BASL),Y   ;get 80 char
CDAA:2C 54 C0         328         BIT  TXTPAGE1   ;restore page1
CDAD:A4 2A            329         LDY  BAS2L      ;get 40 index
CDAF:91 28            330         STA  (BASL),Y
CDB1:88               331         DEY
CDB2:10 EA    CD9E    332         BPL  SCR2       ;do next 40 byte
CDB4:CA               333         DEX             ;do next line
CDB5:30 04    CDBB    334         BMI  SCR4       ;=>done with setup
CDB7:E4 22            335         CPX  WNDTOP     ;at top yet?
CDB9:B0 DD    CD98    336         BCS  SCR1
CDBB:8D 00 C0         337 SCR4    STA  CLR80COL   ;clear 80STORE for 40 columns
CDBE:8D 0C C0         338         STA  CLR80VID   ;clear 80VID for 40 columns
CDC1:4C F8 CD         339         JMP  SCRNRET    ;calc base, restore X, exit
CDC4:                 340 *
CDC4:8A               341 SCRN48  TXA              ;save X
CDC5:48               342         PHA
CDC6:A2 17            343         LDX  #23        ;start at bottom of screen
CDC8:8A               344 SCR5    TXA             ;set base for current line
CDC9:20 BA CA         345         JSR  BASCALC
CDCC:A0 00            346         LDY  #0         ;start at left of screen
CDCE:8D 01 C0         347         STA  SET80COL   ;enable page2 store
CDD1:B1 28            348 SCR6    LDA  (BASL),Y   ;get 40 column char
CDD3:84 2A            349 SCR8    STY  BAS2L      ;save 40 column index
CDD5:48               350         PHA             ;save char
```

```
CE24:D0 11   CE37   20          BNE  INVX       ;=>cursor off, don't invert
CE26:48             21 INVERT   PHA             ;save AC
CE27:98             22          TYA             ; AND Y
CE28:48             23          PHA
CE29:AC 7B 05       24          LDY  OURCH      ;GET CH
CE2C:20 44 CE       25          JSR  PICK       ;GET CHARACTER
CE2F:49 80          26          EOR  #$80       ;FLIP INVERSE/NORMAL
CE31:20 70 CE       27          JSR  STORIT     ; ONTO SCREEN
CE34:68             28          PLA             ;RESTORE Y
CE35:A8             29          TAY             ; AND AC
CE36:68             30          PLA
CE37:60             31 INVX     RTS
CE38:               32 ****************************************
CE38:               33 * NAME     : STORCHAR
CE38:               34 * FUNCTION: STORE A CHAR ON SCREEN
CE38:               35 * INPUT    : AC=CHAR
CE38:               36 *          : Y=CH POSITION
CE38:               37 * OUTPUT   : CHAR ON SCREEN
CE38:               38 * VOLATILE: NOTHING
CE38:               39 * CALLS    : SCREENIT
CE38:               40 ****************************************
CE38:               41 *
CE38:        CE38   42 STORCHAR EQU *
CE38:48             43          PHA             ;SAVE AC
CE39:24 32          44          BIT  INVFLG     ;NORMAL OR INVERSE?
CE3B:30 02   CE3F   45          BMI  STOR2      ;=>NORMAL
CE3D:29 7F          46          AND  #$7F       ;inverse it
CE3F:        CE3F   47 STOR2    EQU  *
CE3F:20 70 CE       48          JSR  STORIT     ;=>do it!!
CE42:68             49          PLA             ;RESTORE AC
CE43:60             50 SEV      RTS
CE44:               51 ****************************************
CE44:               52 * NAME     : PICK
CE44:               53 * FUNCTION: GET A CHAR FROM SCREEN
CE44:               54 * INPUT    : Y=CH POSITION
CE44:               55 * OUTPUT   : AC=CHARACTER
CE44:               56 * VOLATILE: NOTHING
CE44:               57 * CALLS    : SCREENIT
CE44:               58 ****************************************
CE44:               59 *
CE44:B1 28          60 PICK     LDA  (BASL),Y   ;get 40 column character
CE46:2C 1F C0       61          BIT  RD80VID    ;80 columns?
CE49:10 19   CE64   62          BPL  PICK3      ;=>no, do text shift
CE4B:8D 01 C0       63          STA  SET80COL   ;force 80STORE for 80 columns
CE4E:84 2A          64          STY  BAS2L      ;temp store for position
CE50:98             65          TYA             ;divide CH by two
CE51:45 20          66          EOR  WNDLFT     ;C=1 if char in main RAM
CE53:6A             67          ROR  A          ;get low bit into carry
CE54:B0 04   CE5A   68          BCS  PICK1      ;=>store in main memory
CE56:AD 55 C0       69          LDA  TXTPAGE2   ;else switch in page 2
CE59:C8             70          INY             ;for odd left, aux bytes
CE5A:98             71 PICK1    TYA             ;divide position by 2
CE5B:4A             72          LSR  A          ;and use carry as
CE5C:A8             73          TAY             ;page indicator
```

```
CDD6:98             351         TYA             ;div 2 for 80 column index
CDD7:4A             352         LSR  A
CDD8:B0 03   CDDD   353         BCS  SCR7       ;save on page1
CDDA:8D 55 C0       354         STA  TXTPAGE2
CDDD:A8             355 SCR7    TAY             ;get 80 column index
CDDE:68             356         PLA             ;now save character
CDDF:91 28          357         STA  (BASL),Y
CDE1:8D 54 C0       358         STA  TXTPAGE1   ;flip page1
CDE4:A4 2A          359         LDY  BAS2L      ;restore 40 column index
CDE6:C8             360         INY             ;move to the right
CDE7:C0 28          361         CPY  #40        ;at right yet?
CDE9:90 E6   CDD1   362         BCC  SCR6       ;=>no, do next column
CDEB:20 B0 CC       363         JSR  CLRHALF    ;clear half of screen
CDEE:CA             364         DEX             ;else do next line of screen
CDEF:30 04   CDF5   365         BMI  SCR9       ;=>done with top line
CDF1:E4 22          366         CPX  WNDTOP     ;at top yet?
CDF3:B0 D3   CDC8   367         BCS  SCR5
CDF5:8D 0D C0       368 SCR9    STA  SET80VID   ;convert to 80 columns
CDF8:20 FE CD       369 SCRNRET JSR  VTAB       ;update base
CDFB:68             370         PLA             ;restore X
CDFC:AA             371         TAX
CDFD:60             372         RTS
CDFE:               373 *
CDFE:A5 25          374 VTAB    LDA  CV         ;get 80 column CV
CE00:8D FB 05       375         STA  OURCV      ;copy to OURCV
CE03:20 BA CA       376 VTABZ   JSR  BASCALC    ;calc base address
CE06:A5 20          377         LDA  WNDLFT     ;and add window left to it
CE08:2C 1F C0       378         BIT  RD80VID    ;is it 80 columns?
CE0B:10 01   CE0E   379         BPL  VTAB40     ;window width ok
CE0D:4A             380         LSR  A          ;else divide width by 2
CE0E:18             381 VTAB40  CLC             ;prepare to add
CE0F:65 28          382         ADC  BASL       ;add in window left
CE11:85 28          383         STA  BASL       ;and update base
CE13:60             384 VTABX   RTS             ;and exit
CE14:                29         INCLUDE SUBS3
CE14:C9 E1            1 UPSHFT  CMP  #$E1       ;is it lowercase?
CE16:90 06   CE1E     2         BCC  UPSHFT2    ;=>nope
CE18:C9 FB            3         CMP  #$FB       ;lowercase?
CE1A:B0 02   CE1E     4         BCS  UPSHFT2    ;=>nope
CE1C:29 DF            5         AND  #$DF       ;else upshift
CE1E:60               6 UPSHFT2 RTS
CE1F:                 7 *
CE1F:                 8 ****************************************
CE1F:                 9 * NAME     : INVERT
CE1F:                10 * FUNCTION: INVERT CHAR AT CH/CV
CE1F:                11 *          : Unless Pascal and M.CURSOR=1
CE1F:                12 * INPUT    : NOTHING
CE1F:                13 * OUTPUT   : CHAR AT CH/CV INVERTED
CE1F:                14 * VOLATILE: NOTHING
CE1F:                15 * CALLS    : PICK, STORCHAR
CE1F:                16 ****************************************
CE1F:                17 *
CE1F:AD FB 04        18 PASINV   LDA  MODE       ;check pascal cursor flag
CE22:29 10           19          AND  #M.CURSOR  ;before displaying cursor
```

```
CE5D:B1 28          74 PICK2   LDA  (BASL),Y  ;get that char
CE5F:2C 54 C0       75         BIT  TXTPAGE1  ;flip to page 1
CE62:A4 2A          76         LDY  BAS2L
CE64:2C 1E C0       77 PICK3   BIT  ALTCHARSET ;only allow mouse text
CE67:10 06   CE6F   78         BPL  PICK4     ;if alternate character set
CE69:C9 20          79         CMP  #$20
CE6B:B0 02   CE6F   80         BCS  PICK4
CE6D:09 40          81         ORA  #$40
CE6F:60             82 PICK4   RTS
CE70:               83 *
CE70:               84 ****************************************
CE70:               85 * NAME    : STORIT
CE70:               86 * FUNCTION: STORE CHAR
CE70:               87 * INPUT   : AC=char for store
CE70:               88 *         :  Z=high bit of char
CE70:               89 *         :  Y=CH POSITION
CE70:               90 * OUTPUT  : AC=CHAR (PICK)
CE70:               91 * VOLATILE: NOTHING
CE70:               92 * CALLS   : NOTHING
CE70:               93 ****************************************
CE70:               94 *
CE70:48             95 STORIT  PHA            ;save char
CE71:29 FF          96         AND  #$FF      ;if high bit set...
CE73:30 16   CE8B   97         BMI  STORE1    ;=>not mouse text
CE75:AD FB 04       98         LDA  MODE      ;is mouse text enabled?
CE78:6A             99         ROR  A         ;use carry as flag
CE79:68            100         PLA             ;and restore char
CE7A:48            101         PHA             ;need to save it too
CE7B:90 0E   CE8B  102         BCC  STORE1
CE7D:2C 1E C0      103         BIT  ALTCHARSET ;only do mouse text if
CE80:10 09   CE8B  104         BPL  STORE1    ;alt char set switched in
CE82:49 40         105         EOR  #$40      ;do mouse shift
CE84:2C AC CE      106         BIT  HEX60     ;is it in proper range?
CE87:F0 02   CE8B  107         BEQ  STORE1    ;=>yes, leave it
CE89:49 40         108         EOR  #$40      ;else shift it back
CE8B:              109 *
CE8B:2C 1F C0      110 STORE1 BIT  RD80VID   ;80 columns?
CE8E:10 1D   CEAD  111         BPL  STOR40    ;=>no, 40 columns
CE90:8D 01 C0      112         STA  SET80COL  ;force 80STORE for 80 columns
CE93:48            113         PHA            ;save shifted character
CE94:84 2A         114         STY  BAS2L     ;temp storage
CE96:98            115         TYA            ;get position
CE97:45 20         116         EOR  WNDLFT    ;C=1 if char in main RAM
CE99:4A            117         LSR  A
CE9A:B0 04   CEA0  118         BCS  STORE2    ;=>yes, main RAM
CE9C:AD 55 C0      119         LDA  TXTPAGE2  ;else flip in main RAM
CE9F:C8            120         INY            ;do this for odd left bytes
CEA0:98            121 STORE2 TYA            ;get position
CEA1:4A            122         LSR  A         ;and divide it by 2
CEA2:A8            123         TAY
CEA3:68            124 STORIT2 PLA            ;restore acc
CEA4:91 28         125         STA  (BASL),Y  ;save to screen
CEA6:AD 54 C0      126         LDA  TXTPAGE1  ;flip to page 1
CEA9:A4 2A         127         LDY  BAS2L
CEAB:68            128         PLA            ;restore true Acc
CEAC:60            129 HEX60  RTS            ;and exit
CEAD:              130 *
CEAD:91 28         131 STOR40 STA  (BASL),Y  ;quick 40 column store
CEAF:68            132         PLA            ;restore real char
CEB0:60            133         RTS
CEB1:              134 ****************************************
CEB1:              135 * NAME    : ESCON
CEB1:              136 * FUNCTION: TURN ON 'ESCAPE' CURSOR
CEB1:              137 * INPUT   : NONE
CEB1:              138 * OUTPUT  : 'CHAR'=ORIGINAL CHAR
CEB1:              139 * VOLATELE: NOTHING
CEB1:              140 * CALLS   : PICK,STORCHAR
CEB1:              141 ****************************************
CEB1:              142 *
CEB1:       CEB1   143 ESCON  EQU  *
CEB1:48            144         PHA            ;SAVE AC
CEB2:98            145         TYA            ; AND Y
CEB3:48            146         PHA
CEB4:AC 7B 05      147         LDY  OURCH     ;GET CH
CEB7:20 44 CE      148         JSR  PICK      ;GET ORIGINAL CHARACTER
CEBA:8D 7B 06      149         STA  CHAR      ; AND REMEMBER FOR ESCOFF
CEBD:29 80         150         AND  #$80      ;SAVE NORMAL/INVERSE BIT
CEBF:49 AB         151         EOR  #$AB      ;MAKE IT AN INVERSE '+'
CEC1:4C CD CE      152         JMP  ESCRET    ;RETURN VIA SIMILAR CODE
CEC4:              153 ****************************************
CEC4:              154 * NAME    : ESCOFF
CEC4:              155 * FUNCTION: TURN OFF 'ESCAPE' CURSOR
CEC4:              156 * INPUT   : 'CHAR'=ORIGINAL CHAR
CEC4:              157 * OUTPUT  : NONE
CEC4:              158 * VOLATILE: NOTHING
CEC4:              159 * CALLS   : STORCHAR
CEC4:              160 ****************************************
CEC4:              161 *
CEC4:       CEC4   162 ESCOFF  EQU  *
CEC4:48            163         PHA            ;SAVE AC
CEC5:98            164         TYA            ; AND Y
CEC6:48            165         PHA
CEC7:AC 7B 05      166         LDY  OURCH     ;GET CH
CECA:AD 7B 06      167         LDA  CHAR      ;GET ORIGINAL CHARACTER
CECD:       CECD   168 ESCRET  EQU  *         ;USED BY ESCON
CECD:20 70 CE      169         JSR  STORIT    ;  EXACTLY AS IT WAS
CED0:68            170         PLA            ;RESTORE Y
CED1:A8            171         TAY
CED2:68            172         PLA            ; AND AC
CED3:60            173         RTS
CED4:              174 ****************************************
CED4:              175 * NAME    : PSETUP
CED4:              176 * FUNCTION: SETUP ZP FOR PASCAL
CED4:              177 * INPUT   : NONE
CED4:              178 * OUTPUT  : NONE
CED4:              179 * VOLATILE: AC
CED4:              180 * CALLS   : NOTHING
CED4:              181 ****************************************
```

```
CED4:                 182 *
CED4:           CED4  183 PSETUP  EQU  *
CED4:20 71 CD         184         JSR  FULL80    ;SET FULL 80COL WINDOW
CED7:A9 FF            185 IS80    LDA  #255
CED9:85 32            186         STA  INVFLG    ;ASSUME NORMAL MODE
CEDB:                 187 *
CEDB:AD FB 04         188         LDA  MODE
CEDE:29 04            189         AND  #M.VMODE
CEE0:F0 02    CEE4    190         BEQ  PSETUPRET ;=>IT'S NORMAL
CEE2:46 32            191         LSR  INVFLG    ;MAKE IT INVERSE
CEE4:                 192 *
CEE4:           CEE4  193 PSETUPRET EQU *
CEE4:AD 7B 07         194         LDA  OLDBASL   ;SET UP BASE ADDRESS
CEE7:85 28            195         STA  BASL
CEE9:AD FB 07         196         LDA  OLDBASH
CEEC:85 29            197         STA  BASH
CEEE:AD FB 05         198         LDA  OURCV     ;get user's cursor vertical
CEF1:85 25            199         STA  CV        ;and set it up
CEF3:60               200         RTS
CEF4:                 201 ****************************************
CEF4:                 202 *
CEF4:                 203 * COPYROM is called when the video firmware is
CEF4:                 204 * initialized.  If the language card is switched
CEF4:                 205 * in for reading, it copies the F8 ROM to the
CEF4:                 206 * language card and restores the state of the
CEF4:                 207 * language card.
CEF4:                 208 *
CEF4:2C 12 C0         209 COPYROM BIT  RDLCRAM   ;is the LC switched in?
CEF7:10 3D    CF36    210         BPL  ROMOK     ;=>no, do nothing
CEF9:A9 06            211         LDA  #GOODF8   ;yes, check $F8 RAM
CEFB:CD B3 FB         212         CMP  F8VERSION ;does it match?
CEFE:F0 36    CF36    213         BEQ  ROMOK     ;=> assum ROM is there
CF00:A2 03            214         LDX  #3        ;indicate bank 2, RAM write enabled
CF02:2C 11 C0         215         BIT  RDLCBNK2  ;is it bank 2?
CF05:30 02    CF09    216         BMI  BANK2     ;=>yes, we were right
CF07:A2 0B            217         LDX  #$B       ;no, bank 1, RAM write enabled
CF09:8D B3 FB         218 BANK2   STA  F8VERSION ;write to see if LC is
CF0C:2C 80 C0         219         BIT  $C080     ;write protected (read RAM)
CF0F:AD B3 FB         220         LDA  F8VERSION ;did it change?
CF12:C9 06            221         CMP  #GOODF8
CF14:F0 01    CF17    222         BEQ  WRTENBL   ;=>yes, write enabled
CF16:E8               223         INX            ;else indicate write protect
CF17:2C 81 C0         224 WRTENBL BIT  $C081     ;read ROM, write RAM
CF1A:2C 81 C0         225         BIT  $C081     ;twice is nice
CF1D:A0 00            226         LDY  #$0       ;now copy ROM to RAM
CF1F:A9 F8            227         LDA  #$F8
CF21:85 37            228         STA  CSWH      ;hooks set later
CF23:84 36            229         STY  CSWL
CF25:B1 36            230 COPYROM2 LDA (CSWL),Y  ;get a byte
CF27:91 36            231         STA  (CSWL),Y  ;and move it
CF29:C8               232         INY
CF2A:D0 F9    CF25    233         BNE  COPYROM2
CF2C:E6 37            234         INC  CSWH      ;next page
CF2E:D0 F5    CF25    235         BNE  COPYROM2  ;finish copy
CF30:BD 80 C0         236         LDA  $C080,x   ;read RAM
CF33:BD 80 C0         237         LDA  $C080,x
CF36:60               238 ROMOK   RTS            ;done with ROM copy
```

```
0000:           0000    1 TEST    EQU  0

0000:                   2         LST  On,A,V
0000:           0001    3 IRQTEST EQU  1
0000:                   4         MSB  ON        ;SET THEM HIBITS
0000:           0000    5         DO   TEST
 S                      6 F8ORG   EQU  $1800
 S                      7 IOADR   EQU  $2000     ;For setting PR# hooks
 S                      8 C1ORG   EQU  $2100
 S                      9 C3ORG   EQU  $2300
 S                     10 C8ORG   EQU  $2800
0000:                  11         ELSE
0000:           F800   12 F8ORG   EQU  $F800
0000:           C100   13 C1ORG   EQU  $C100
0000:           C300   14 C3ORG   EQU  $C300
0000:           C800   15 C8ORG   EQU  $C800
0000:                  16         FIN

0000:                   2 ********************************
0000:                   3 *
0000:                   4 * APPLE II
0000:                   5 * MONITOR II
0000:                   6 *
0000:                   7 * COPYRIGHT 1978, 1981, 1984 BY
0000:                   8 * APPLE COMPUTER, INC.
0000:                   9 *
0000:                  10 * ALL RIGHTS RESERVED
0000:                  11 *
0000:                  12 * S. WOZNIAK              1977
0000:                  13 * A. BAUM                 1977
0000:                  14 * JOHN A              NOV  1978
0000:                  15 * R. AURICCHIO        SEP  1981
0000:                  16 * E. BEERNINK            1984
0000:                  17 *
0000:           0001   18 APPLE2E EQU  1          ;COND ASSM/RRA0981
0000:                  19 *
0000:                  20 ********************************
F800:           F800   21         ORG  F8ORG
F800:           2000   22         OBJ  $2000
F800:                  23 ********************************
F800:                  24 *
F800:                  25 * Zero Page Equates
F800:                  26 *
F800:           0000   27 LOC0    EQU  $00       ;vector for autost from disk
F800:           0001   28 LOC1    EQU  $01
F800:           0020   29 WNDLFT  EQU  $20       ;left edge of text window
F800:           0021   30 WNDWDTH EQU  $21       ;width of text window
F800:           0022   31 WNDTOP  EQU  $22       ;top of text window
F800:           0023   32 WNDBTM  EQU  $23       ;bottom+1 of text window
F800:           0024   33 CH      EQU  $24       ;cursor horizontal position
F800:           0025   34 CV      EQU  $25       ;cursor vertical position
F800:           0026   35 GBASL   EQU  $26       ;lo-res graphics base addr.
F800:           0027   36 GBASH   EQU  $27
F800:           0028   37 BASL    EQU  $28       ;text base address
```

```
F800:          0029   38 BASH     EQU  $29
F800:          002A   39 BAS2L    EQU  $2A       ;temp base for scrolling
F800:          002B   40 BAS2H    EQU  $2B
F800:          002C   41 H2       EQU  $2C       ;temp for lo-res graphics
F800:          002C   42 LMNEM    EQU  $2C       ;temp for mnemonic decoding
F800:          002D   43 V2       EQU  $2D       ;temp for lo-res graphics
F800:          002D   44 RMNEM    EQU  $2D       ;temp for mnemonic decoding
F800:          002E   45 MASK     EQU  $2E       ;color mask for lo-res gr.
F800:          002E   46 CHKSUM   EQU  $2E       ;temp for opcode decode
F800:          002E   47 FORMAT   EQU  $2E       ;temp for opcode decode
F800:          002F   48 LASTIN   EQU  $2F       ;temp for tape read csum
F800:          002F   49 LENGTH   EQU  $2F       ;temp for opcode decode
F800:          0030   50 COLOR    EQU  $30       ;color for lo-res graphics
F800:          0031   51 MODE     EQU  $31       ;Monitor mode
F800:          0032   52 INVFLG   EQU  $32       ;normal/inverse(/flash)
F800:          0033   53 PROMPT   EQU  $33       ;prompt character
F800:          0034   54 YSAV     EQU  $34       ;position in Monitor command
F800:          0035   55 YSAV1    EQU  $35       ;temp for Y register
F800:          0036   56 CSWL     EQU  $36       ;character output hook
F800:          0037   57 CSWH     EQU  $37
F800:          0038   58 KSWL     EQU  $38       ;character input hook
F800:          0039   59 KSWH     EQU  $39
F800:          003A   60 PCL      EQU  $3A       ;temp for program counter
F800:          003B   61 PCH      EQU  $3B
F800:          003C   62 A1L      EQU  $3C       ;A1-A5 are Monitor temps
F800:          003D   63 A1H      EQU  $3D
F800:          003E   64 A2L      EQU  $3E
F800:          003F   65 A2H      EQU  $3F
F800:          0040   66 A3L      EQU  $40
F800:          0041   67 A3H      EQU  $41
F800:          0042   68 A4L      EQU  $42
F800:          0043   69 A4H      EQU  $43
F800:          0044   70 A5L      EQU  $44
F800:          0044   71 MACSTAT  EQU  $44       ;machine state for break
F800:          0045   72 A5H      EQU  $45
F800:          0045   73 ACC      EQU  $45        ;Acc after break (destroys A5H)
F800:          0046   74 XREG     EQU  $46        ;X reg after break
F800:          0047   75 YREG     EQU  $47        ;Y reg after break
F800:          0048   76 STATUS   EQU  $48        ;P reg after break
F800:          0049   77 SPNT     EQU  $49        ;SP after break
F800:          004E   78 RNDL     EQU  $4E        ;random counter low
F800:          004F   79 RNDH     EQU  $4F        ;random counter high
F800:                 80 *
F800:          0095   81 PICK     EQU  $95       ;CONTROL-U character
F800:                 82 *
F800:          0200   83 IN       EQU  $0200     ;input buffer for GETLN
F800:                 84 *
F800:                 85 * Page 3 vectors
F800:                 86 *
F800:          03F0   87 BRKV     EQU  $03F0     ;vectors here after break
F800:          03F2   88 SOFTEV   EQU  $03F2     ;vector for warm start
F800:          03F4   89 PWREDUP  EQU  $03F4     ;THIS MUST = EOR #$A5 OF SOFTEV+1
F800:          03F5   90 AMPERV   EQU  $03F5     ;APPLESOFT & EXIT VECTOR
F800:          03F8   91 USRADR   EQU  $03F8     ;Applesoft USR function vector
F800:          03FB   92 NMI      EQU  $03FB     ;NMI vector
F800:          03FE   93 IRQLOC   EQU  $03FE     ;Maskable interrupt vector
F800:                 94 *
F800:          0400   95 LINE1    EQU  $0400     ;first line of text screen
F800:          07F8   96 MSLOT    EQU  $07F8     ;current user of $C8 space
F800:                 97 *
F800:          0000   98         DO   TEST
F800:                 99         ELSE
F800:          C000  100 IOADR    EQU  $C000
F800:                101         FIN
F800:                102 *
F800:          C000  103 KBD      EQU  $C000
F800:          C006  104 SLOTCXROM EQU $C006     ;enable slots 1-7
F800:          C007  105 INTCXROM EQU $C007      ;swap out slots for firmware
F800:          C010  106 KBDSTRB  EQU  $C010
F800:          C01F  107 RD80VID  EQU  $C01F
F800:          C020  108 TAPEOUT  EQU  $C020
F800:          C030  109 SPKR     EQU  $C030
F800:          C050  110 TXTCLR   EQU  $C050
F800:          C051  111 TXTSET   EQU  $C051
F800:          C052  112 MIXCLR   EQU  $C052
F800:          C053  113 MIXSET   EQU  $C053
F800:          C054  114 LOWSCR   EQU  $C054
F800:          C055  115 HISCR    EQU  $C055
F800:          C056  116 LORES    EQU  $C056
F800:          C057  117 HIRES    EQU  $C057
F800:          C058  118 SETAN0   EQU  $C058
F800:          C059  119 CLRAN0   EQU  $C059
F800:          C05A  120 SETAN1   EQU  $C05A
F800:          C05B  121 CLRAN1   EQU  $C05B
F800:          C05C  122 SETAN2   EQU  $C05C
F800:          C05D  123 CLRAN2   EQU  $C05D
F800:          C05E  124 SETAN3   EQU  $C05E
F800:          C05F  125 CLRAN3   EQU  $C05F
F800:          C060  126 TAPEIN   EQU  $C060
F800:          C064  127 PADDL0   EQU  $C064
F800:          C070  128 PTRIG    EQU  $C070
F800:                129 *
F800:          C3FA  130 IRQ      EQU  C3ORG+$FA ;IRQ entry in $C3 page
F800:          C47C  131 IRQFIX   EQU  C3ORG+$17C ;Restore state at IRQ
F800:                132 *
F800:          C567  133 XHEADER  EQU  C3ORG+$267
F800:          C5D1  134 XREAD    EQU  C3ORG+$2D1
F800:          C5AA  135 WRITE2   EQU  C3ORG+$2AA
F800:                136 *
F800:          CFFF  137 CLRROM   EQU  $CFFF
F800:          E000  138 BASIC    EQU  $E000
F800:          E003  139 BASIC2   EQU  $E003
F800:                140 *
F800:4A              141 PLOT     LSR  A          ;Y-COORD/2
F801:08              142          PHP             ;SAVE LSB IN CARRY
F802:20 47 F8        143          JSR  GBASCALC   ;CALC BASE ADR IN GBASL,H
F805:28              144          PLP             ;RESTORE LSB FROM CARRY
F806:A9 0F           145          LDA  #$0F       ;MASK $0F IF EVEN
```

```
F808:90 02   F80C  146          BCC  RTMASK
F80A:69 E0         147          ADC  #$E0        ;MASK $F0 IF ODD
F80C:85 2E         148 RTMASK   STA  MASK
F80E:B1 26         149 PLOT1    LDA  (GBASL),Y  ;DATA
F810:45 30         150          EOR  COLOR      ; XOR COLOR
F812:25 2E         151          AND  MASK       ;  AND MASK
F814:51 26         152          EOR  (GBASL),Y  ;   XOR DATA
F816:91 26         153          STA  (GBASL),Y  ;    TO DATA
F818:60            154          RTS
F819:              155 *
F819:20 00 F8      156 HLINE    JSR  PLOT       ;PLOT SQUARE
F81C:C4 2C         157 HLINE1   CPY  H2         ;DONE?
F81E:B0 11   F831  158          BCS  RTS1       ; YES, RETURN
F820:C8            159          INY             ; NO, INCR INDEX (X-COORD)
F821:20 0E F8      160          JSR  PLOT1      ;PLOT NEXT SQUARE
F824:90 F6   F81C  161          BCC  HLINE1     ;ALWAYS TAKEN
F826:69 01         162 VLINEZ   ADC  #$01       ;NEXT Y-COORD
F828:48            163 VLINE    PHA             ; SAVE ON STACK
F829:20 00 F8      164          JSR  PLOT       ; PLOT SQUARE
F82C:68            165          PLA
F82D:C5 2D         166          CMP  V2         ;DONE?
F82F:90 F5   F826  167          BCC  VLINEZ     ; NO, LOOP.
F831:60            168 RTS1     RTS
F832:              169 *
F832:A0 2F         170 CLRSCR   LDY  #$2F       ;MAX Y, FULL SCRN CLR
F834:D0 02   F838  171          BNE  CLRSC2     ;ALWAYS TAKEN
F836:A0 27         172 CLRTOP   LDY  #$27       ;MAX Y, TOP SCRN CLR
F838:84 2D         173 CLRSC2   STY  V2         ;STORE AS BOTTOM COORD
F83A:              174 ;                              FOR VLINE CALLS
F83A:A0 27         175          LDY  #$27       ;RIGHTMOST X-COORD (COLUMN)
F83C:A9 00         176 CLRSC3   LDA  #$00       ;TOP COORD FOR VLINE CALLS
F83E:85 30         177          STA  COLOR      ;CLEAR COLOR (BLACK)
F840:20 28 F8      178          JSR  VLINE      ;DRAW VLINE
F843:88            179          DEY             ;NEXT LEFTMOST X-COORD
F844:10 F6   F83C  180          BPL  CLRSC3     ;LOOP UNTIL DONE.
F846:60            181          RTS
F847:              182 *
F847:48            183 GBASCALC PHA             ;FOR INPUT  00DEFGH
F848:4A            184          LSR  A
F849:29 03         185          AND  #$03
F84B:09 04         186          ORA  #$04       ;GENERATE GBASH=000001FG
F84D:85 27         187          STA  GBASH
F84F:68            188          PLA             ;AND GBASL=HDEDE000
F850:29 18         189          AND  #$18
F852:90 02   F856  190          BCC  GBCALC
F854:69 7F         191          ADC  #$7F
F856:85 26         192 GBCALC   STA  GBASL
F858:0A            193          ASL  A
F859:0A            194          ASL  A
F85A:05 26         195          ORA  GBASL
F85C:85 26         196          STA  GBASL
F85E:60            197          RTS
F85F:              198 *
F85F:A5 30         199 NXTCOL   LDA  COLOR      ;INCREMENT COLOR BY 3
F861:18            200          CLC
F862:69 03         201          ADC  #$03
F864:29 0F         202 SETCOL   AND  #$0F       ;SETS COLOR=17*A MOD 16
F866:85 30         203          STA  COLOR
F868:0A            204          ASL  A          ;BOTH HALF BYTES OF COLOR EQUAL
F869:0A            205          ASL  A
F86A:0A            206          ASL  A
F86B:0A            207          ASL  A
F86C:05 30         208          ORA  COLOR
F86E:85 30         209          STA  COLOR
F870:60            210          RTS
F871:              211 *
F871:4A            212 SCRN     LSR  A          ;READ SCREEN Y-COORD/2
F872:08            213          PHP             ;SAVE LSB (CARRY)
F873:20 47 F8      214          JSR  GBASCALC   ;CALC BASE ADDRESS
F876:B1 26         215          LDA  (GBASL),Y  ;GET BYTE
F878:28            216          PLP             ;RESTORE LSB FROM CARRY
F879:90 04   F87F  217 SCRN2    BCC  RTMSKZ     ;IF EVEN, USE LO H
F87B:4A            218          LSR  A
F87C:4A            219          LSR  A
F87D:4A            220          LSR  A          ;SHIFT HIGH HALF BYTE DOWN
F87E:4A            221          LSR  A
F87F:29 0F         222 RTMSKZ   AND  #$0F       ;MASK 4-BITS
F881:60            223          RTS
F882:              224 *
F882:A6 3A         225 INSDS1   LDX  PCL        ;PRINT PCL,H
F884:A4 3B         226          LDY  PCH
F886:20 96 FD      227          JSR  PRYX2
F889:20 48 F9      228          JSR  PRBLNK     ;FOLLOWED BY A BLANK
F88C:A1 3A         229          LDA  (PCL,X)    ;GET OPCODE
F88E:A8            230 INSDS2   TAY
F88F:4A            231          LSR  A          ;EVEN/ODD TEST
F890:90 09   F89B  232          BCC  IEVEN
F892:6A            233          ROR  A          ;BIT 1 TEST
F893:B0 10   F8A5  234          BCS  ERR        ;XXXXXX11 INVALID OP
F895:C9 A2         235          CMP  #$A2
F897:F0 0C   F8A5  236          BEQ  ERR        ;OPCODE $89 INVALID
F899:29 87         237          AND  #$87       ;MASK BITS
F89B:4A            238 IEVEN    LSR  A          ;LSB INTO CARRY FOR L/R TEST
F89C:AA            239          TAX
F89D:BD 62 F9      240          LDA  FMT1,X     ;GET FORMAT INDEX BYTE
F8A0:20 79 F8      241          JSR  SCRN2      ;R/L H-BYTE ON CARRY
F8A3:D0 04   F8A9  242          BNE  GETFMT
F8A5:A0 80         243 ERR      LDY  #$80       ;SUBSTITUTE $80 FOR INVALID OPS
F8A7:A9 00         244          LDA  #$00       ;SET PRINT FORMAT INDEX TO 0
F8A9:AA            245 GETFMT   TAX
F8AA:BD A6 F9      246          LDA  FMT2,X     ;INDEX INTO PRINT FORMAT TABLE
F8AD:85 2E         247          STA  FORMAT     ;SAVE FOR ADR FIELD FORMATTING
F8AF:              248 ; (0=1 BYTE, 1=2 BYTE, 2=3 BYTE)
F8AF:              249 *
F8AF:              250 * Move code to C1-C2 because the code
F8AF:              251 * that tests for ROM in slot 3 must be in
F8AF:              252 * the F8 ROM.
F8AF:              253 *
```

```
F8AF:AA          254          TAX             ;save ACC in X
F8B0:84 2A       255          STY  BAS2L      ;and Y in scrolling temp
F8B2:A0 10       256          LDY  #$10       ;call = finish mnemonics
F8B4:4C B4 FB    257          JMP  GOTOCX     ;off to C100
F8B7:            258 *
F8B7:            259 * Test slot 3 for a card containing ROM.
F8B7:            260 * If there is one, we'll not switch in our internal
F8B7:            261 * slot 3 firmware (for 80 columns).
F8B7:            262 * On entry Y has a high value like $F2, so the
F8B7:            263 * ROM/bus is read a bunch of times
F8B7:            264 *
F8B7:8D 06 C0    265 TSTROM   STA  SLOTCXROM ;swap in slots
F8BA:A2 02       266 TSTROM0  LDX  #2         ;check 2 ID bytes
F8BC:BD 05 C3    267 TSTROM1  LDA  $C305,X    ;at C305 and $C307
F8BF:DD 9C FC    268          CMP  CLREOL,X   ;with two bytes that are same
F8C2:D0 07   F8CB 269          BNE  XTST
F8C4:CA          270          DEX             ;check next ID byte
F8C5:CA          271          DEX
F8C6:10 F4   F8BC 272          BPL  TSTROM1
F8C8:88          273          DEY
F8C9:D0 EF   F8BA 274          BNE  TSTROM0    ;if ROM ok, exit with BEQ
F8CB:8D 07 C0    275 XTST     STA  INTCXROM   ;swap internal ROM
F8CE:60          276          RTS             ;and return there
F8CF:            277 *
F8CF:EA          278          NOP             ;line things up
F8D0:            279 *
F8D0:20 82 F8    280 INSTDSP  JSR  INSDS1     ;GEN FMT, LEN BYTES
F8D3:48          281          PHA             ;SAVE MNEMONIC TABLE INDEX
F8D4:B1 3A       282 PRNTOP   LDA  (PCL),Y
F8D6:20 DA FD    283          JSR  PRBYTE
F8D9:A2 01       284          LDX  #$01       ;PRINT 2 BLANKS
F8DB:20 4A F9    285 PRNTBL   JSR  PRBL2
F8DE:C4 2F       286          CPY  LENGTH     ;PRINT INST (1-3 BYTES)
F8E0:C8          287          INY             ;IN A 12 CHR FIELD
F8E1:90 F1   F8D4 288          BCC  PRNTOP
F8E3:A2 03       289          LDX  #$03       ;CHAR COUNT FOR MNEMONIC INDEX
F8E5:C0 04       290          CPY  #$04
F8E7:90 F2   F8DB 291          BCC  PRNTBL
F8E9:68          292          PLA             ;RECOVER MNEMONIC INDEX
F8EA:A8          293          TAY
F8EB:B9 C0 F9    294          LDA  MNEML,Y
F8EE:85 2C       295          STA  LMNEM      ;FETCH 3-CHAR MNEMONIC
F8F0:B9 00 FA    296          LDA  MNEMR,Y    ;  (PACKED INTO 2-BYTES)
F8F3:85 2D       297          STA  RMNEM
F8F5:A9 00       298 PRMN1    LDA  #$00
F8F7:A0 05       299          LDY  #$05
F8F9:06 2D       300 PRMN2    ASL  RMNEM      ;SHIFT 5 BITS OF CHARACTER INTO A
F8FB:26 2C       301          ROL  LMNEM
F8FD:2A          302          ROL  A          ;  (CLEARS CARRY)
F8FE:88          303          DEY
F8FF:D0 F8   F8F9 304          BNE  PRMN2
F901:69 BF       305          ADC  #$BF       ;ADD "?" OFFSET
F903:20 ED FD    306          JSR  COUT       ;OUTPUT A CHAR OF MNEM
F906:CA          307          DEX
F907:D0 EC   F8F5 308          BNE  PRMN1
F909:20 48 F9    309          JSR  PRBLNK     ;OUTPUT 3 BLANKS
F90C:A4 2F       310          LDY  LENGTH
F90E:A2 06       311          LDX  #$06       ;CNT FOR 6 FORMAT BITS
F910:E0 03       312 PRADR1   CPX  #$03
F912:F0 1C   F930 313          BEQ  PRADR5     ;IF X=3 THEN ADDR.
F914:06 2E       314 PRADR2   ASL  FORMAT
F916:90 0E   F926 315          BCC  PRADR3
F918:BD B3 F9    316          LDA  CHAR1-1,X
F91B:20 ED FD    317          JSR  COUT
F91E:BD B9 F9    318          LDA  CHAR2-1,X
F921:F0 03   F926 319          BEQ  PRADR3
F923:20 ED FD    320          JSR  COUT
F926:CA          321 PRADR3   DEX
F927:D0 E7   F910 322          BNE  PRADR1
F929:60          323          RTS
F92A:88          324 PRADR4   DEY
F92B:30 E7   F914 325          BMI  PRADR2
F92D:20 DA FD    326          JSR  PRBYTE
F930:A5 2E       327 PRADR5   LDA  FORMAT
F932:C9 E8       328          CMP  #$E8       ;HANDLE REL ADR MODE
F934:B1 3A       329          LDA  (PCL),Y    ;SPECIAL (PRINT TARGET,
F936:90 F2   F92A 330          BCC  PRADR4     ;  NOT OFFSET)
F938:20 56 F9    331 RELADR   JSR  PCADJ3
F93B:AA          332          TAX             ;PCL,PCH+OFFSET+1 TO A,Y
F93C:E8          333          INX
F93D:D0 01   F940 334          BNE  PRNTYX     ;+1 TO Y,X
F93F:C8          335          INY
F940:98          336 PRNTYX   TYA
F941:20 DA FD    337 PRNTAX   JSR  PRBYTE     ;OUTPUT TARGET ADR
F944:8A          338 PRNTX    TXA             ;  OF BRANCH AND RETURN
F945:4C DA FD    339          JMP  PRBYTE
F948:            340 *
F948:A2 03       341 PRBLNK   LDX  #$03       ;BLANK COUNT
F94A:A9 A0       342 PRBL2    LDA  #$A0       ;LOAD A SPACE
F94C:20 ED FD    343 PRBL3    JSR  COUT       ;OUTPUT A BLANK
F94F:CA          344          DEX
F950:D0 F8   F94A 345          BNE  PRBL2      ;LOOP UNTIL COUNT=0
F952:60          346          RTS
F953:            347 *
F953:38          348 PCADJ    SEC             ;0=1 BYTE, 1=2 BYTE,
F954:A5 2F       349 PCADJ2   LDA  LENGTH     ;  2=3 BYTE
F956:A4 3B       350 PCADJ3   LDY  PCH
F958:AA          351          TAX             ;TEST DISPLACEMENT SIGN
F959:10 01   F95C 352          BPL  PCADJ4     ;  (FOR REL BRANCH)
F95B:88          353          DEY             ;EXTEND NEG BY DECR PCH
F95C:65 3A       354 PCADJ4   ADC  PCL
F95E:90 01   F961 355          BCC  RTS2       ;PCL+LENGTH(OR DISPL)+1 TO A
F960:C8          356          INY             ;  CARRY INTO Y (PCH)
F961:60          357 RTS2     RTS
F962:            358 ;
F962:            359 ; FMT1 BYTES:    XXXXXXY0 INSTRS
F962:            360 ; IF Y=0         THEN LEFT HALF BYTE
F962:            361 ; IF Y=1         THEN RIGHT HALF BYTE
```

```
F962:             362 ;                   (X=INDEX)
F962:             363 ;
F962:04           364 FMT1    DFB  $04
F963:20           365         DFB  $20
F964:54           366         DFB  $54
F965:30           367         DFB  $30
F966:0D           368         DFB  $0D
F967:80           369         DFB  $80
F968:04           370         DFB  $04
F969:90           371         DFB  $90
F96A:03           372         DFB  $03
F96B:22           373         DFB  $22
F96C:54           374         DFB  $54
F96D:33           375         DFB  $33
F96E:0D           376         DFB  $0D
F96F:80           377         DFB  $80
F970:04           378         DFB  $04
F971:90           379         DFB  $90
F972:04           380         DFB  $04
F973:20           381         DFB  $20
F974:54           382         DFB  $54
F975:33           383         DFB  $33
F976:0D           384         DFB  $0D
F977:80           385         DFB  $80
F978:04           386         DFB  $04
F979:90           387         DFB  $90
F97A:04           388         DFB  $04
F97B:20           389         DFB  $20
F97C:54           390         DFB  $54
F97D:3B           391         DFB  $3B
F97E:0D           392         DFB  $0D
F97F:80           393         DFB  $80
F980:04           394         DFB  $04
F981:90           395         DFB  $90
F982:00           396         DFB  $00
F983:22           397         DFB  $22
F984:44           398         DFB  $44
F985:33           399         DFB  $33
F986:0D           400         DFB  $0D
F987:C8           401         DFB  $C8
F988:44           402         DFB  $44
F989:00           403         DFB  $00
F98A:11           404         DFB  $11
F98B:22           405         DFB  $22
F98C:44           406         DFB  $44
F98D:33           407         DFB  $33
F98E:0D           408         DFB  $0D
F98F:C8           409         DFB  $C8
F990:44           410         DFB  $44
F991:A9           411         DFB  $A9
F992:01           412         DFB  $01
F993:22           413         DFB  $22
F994:44           414         DFB  $44
F995:33           415         DFB  $33
F996:0D           416         DFB  $0D
F997:80           417         DFB  $80
F998:04           418         DFB  $04
F999:90           419         DFB  $90
F99A:01           420         DFB  $01
F99B:22           421         DFB  $22
F99C:44           422         DFB  $44
F99D:33           423         DFB  $33
F99E:0D           424         DFB  $0D
F99F:80           425         DFB  $80
F9A0:04           426         DFB  $04
F9A1:90           427         DFB  $90
F9A2:26           428         DFB  $26
F9A3:31           429         DFB  $31
F9A4:87           430         DFB  $87
F9A5:9A           431         DFB  $9A
F9A6:             432 ;
F9A6:             433 ; ZZXXXY01 INSTR'S
F9A6:             434 ;
F9A6:00           435 FMT2    DFB  $00      ;ERR
F9A7:21           436         DFB  $21      ;IMM
F9A8:81           437         DFB  $81      ;Z-PAGE
F9A9:82           438         DFB  $82      ;ABS
F9AA:00           439         DFB  $00      ;IMPLIED
F9AB:00           440         DFB  $00      ;ACCUMULATOR
F9AC:59           441         DFB  $59      ;(ZPAG,X)
F9AD:4D           442         DFB  $4D      ;(ZPAG),Y
F9AE:91           443         DFB  $91      ;ZPAG,X
F9AF:92           444         DFB  $92      ;ABS,X
F9B0:86           445         DFB  $86      ;ABS,Y
F9B1:4A           446         DFB  $4A      ;(ABS)
F9B2:85           447         DFB  $85      ;ZPAG,Y
F9B3:9D           448         DFB  $9D      ;RELATIVE
F9B4:AC           449 CHAR1   DFB  $AC      ;','
F9B5:A9           450         DFB  $A9      ;')'
F9B6:AC           451         DFB  $AC      ;','
F9B7:A3           452         DFB  $A3      ;'#'
F9B8:A8           453         DFB  $A8      ;'('
F9B9:A4           454         DFB  $A4      ;'$'
F9BA:D9           455 CHAR2   DFB  $D9      ;'Y'
F9BB:00           456         DFB  $00
F9BC:D8           457         DFB  $D8      ;'Y'
F9BD:A4           458         DFB  $A4      ;'$'
F9BE:A4           459         DFB  $A4      ;'$'
F9BF:00           460         DFB  $00
F9C0:1C           461 MNEML   DFB  $1C
F9C1:8A           462         DFB  $8A
F9C2:1C           463         DFB  $1C
F9C3:23           464         DFB  $23
F9C4:5D           465         DFB  $5D
F9C5:8B           466         DFB  $8B
F9C6:1B           467         DFB  $1B
F9C7:A1           468         DFB  $A1
F9C8:9D           469         DFB  $9D
```

```
F9C9:8A          470          DFB  $8A
F9CA:1D          471          DFB  $1D
F9CB:23          472          DFB  $23
F9CC:9D          473          DFB  $9D
F9CD:8B          474          DFB  $8B
F9CE:1D          475          DFB  $1D
F9CF:A1          476          DFB  $A1
F9D0:00          477          DFB  $00
F9D1:29          478          DFB  $29
F9D2:19          479          DFB  $19
F9D3:AE          480          DFB  $AE
F9D4:69          481          DFB  $69
F9D5:A8          482          DFB  $A8
F9D6:19          483          DFB  $19
F9D7:23          484          DFB  $23
F9D8:24          485          DFB  $24
F9D9:53          486          DFB  $53
F9DA:1B          487          DFB  $1B
F9DB:23          488          DFB  $23
F9DC:24          489          DFB  $24
F9DD:53          490          DFB  $53
F9DE:19          491          DFB  $19      ; (A) FORMAT ABOVE
F9DF:A1          492          DFB  $A1
F9E0:00          493          DFB  $00
F9E1:1A          494          DFB  $1A
F9E2:5B          495          DFB  $5B
F9E3:5B          496          DFB  $5B
F9E4:A5          497          DFB  $A5
F9E5:69          498          DFB  $69
F9E6:24          499          DFB  $24      ; (B) FORMAT
F9E7:24          500          DFB  $24
F9E8:AE          501          DFB  $AE
F9E9:AE          502          DFB  $AE
F9EA:A8          503          DFB  $A8
F9EB:AD          504          DFB  $AD
F9EC:29          505          DFB  $29
F9ED:00          506          DFB  $00
F9EE:7C          507          DFB  $7C      ; (C) FORMAT
F9EF:00          508          DFB  $00
F9F0:15          509          DFB  $15
F9F1:9C          510          DFB  $9C
F9F2:6D          511          DFB  $6D
F9F3:9C          512          DFB  $9C
F9F4:A5          513          DFB  $A5
F9F5:69          514          DFB  $69
F9F6:29          515          DFB  $29      ; (D) FORMAT
F9F7:53          516          DFB  $53
F9F8:84          517          DFB  $84
F9F9:13          518          DFB  $13
F9FA:34          519          DFB  $34
F9FB:11          520          DFB  $11
F9FC:A5          521          DFB  $A5
F9FD:69          522          DFB  $69
F9FE:23          523          DFB  $23      ; (E) FORMAT
F9FF:A0          524          DFB  $A0
FA00:D8          525 MNEMR    DFB  $D8
FA01:62          526          DFB  $62
FA02:5A          527          DFB  $5A
FA03:48          528          DFB  $48
FA04:26          529          DFB  $26
FA05:62          530          DFB  $62
FA06:94          531          DFB  $94
FA07:88          532          DFB  $88
FA08:54          533          DFB  $54
FA09:44          534          DFB  $44
FA0A:C8          535          DFB  $C8
FA0B:54          536          DFB  $54
FA0C:68          537          DFB  $68
FA0D:44          538          DFB  $44
FA0E:E8          539          DFB  $E8
FA0F:94          540          DFB  $94
FA10:00          541          DFB  $00
FA11:B4          542          DFB  $B4
FA12:08          543          DFB  $08
FA13:84          544          DFB  $84
FA14:74          545          DFB  $74
FA15:B4          546          DFB  $B4
FA16:28          547          DFB  $28
FA17:6E          548          DFB  $6E
FA18:74          549          DFB  $74
FA19:F4          550          DFB  $F4
FA1A:CC          551          DFB  $CC
FA1B:4A          552          DFB  $4A
FA1C:72          553          DFB  $72
FA1D:F2          554          DFB  $F2
FA1E:A4          555          DFB  $A4      ; (A) FORMAT
FA1F:8A          556          DFB  $8A
FA20:00          557          DFB  $00
FA21:AA          558          DFB  $AA
FA22:A2          559          DFB  $A2
FA23:A2          560          DFB  $A2
FA24:74          561          DFB  $74
FA25:74          562          DFB  $74
FA26:74          563          DFB  $74      ; (B) FORMAT
FA27:72          564          DFB  $72
FA28:44          565          DFB  $44
FA29:68          566          DFB  $68
FA2A:B2
    567      DFB  $B2
FA2B:32          568          DFB  $32
FA2C:B2          569          DFB  $B2
FA2D:00          570          DFB  $00
FA2E:22          571          DFB  $22      ; (C) FORMAT
FA2F:00          572          DFB  $00
FA30:1A          573          DFB  $1A
FA31:1A          574          DFB  $1A
FA32:26          575          DFB  $26
FA33:26          576          DFB  $26
```

```
FA34:72           577          DFB  $72
FA35:72           578          DFB  $72
FA36:88           579          DFB  $88        ; (D) FORMAT
FA37:C8           580          DFB  $C8
FA38:C4           581          DFB  $C4
FA39:CA           582          DFB  $CA
FA3A:26           583          DFB  $26
FA3B:48           584          DFB  $48
FA3C:44           585          DFB  $44
FA3D:44           586          DFB  $44
FA3E:A2           587          DFB  $A2        ; (E) FORMAT
FA3F:C8           588          DFB  $C8
FA40:             589 *
FA40:       C3FA  590 NEWIRQ   EQU  $C3FA     ;new IRQ entry
FA40:             591 *
FA40:85 45        592 OLDIRQ   STA  $45        ;(should never be used)
FA42:A5 45        593          LDA  $45        ;for those who save A to $45
FA44:4C FA C3     594          JMP  NEWIRQ     ;go to interrupt handler
FA47:             595 *
FA47:8D 06 C0     596 NEWBREAK STA SETSLOTCXROM ;force in slots
FA4A:85 45        597          STA  ACC        ;save accumulator
FA4C:             598 *
FA4C:28           599 BREAK    PLP
FA4D:20 4C FF     600          JSR  SAV1       ;SAVE REG'S ON BREAK
FA50:68           601          PLA             ; INCLUDING PC
FA51:85 3A        602          STA  PCL
FA53:68           603          PLA
FA54:85 3B        604          STA  PCH
FA56:6C F0 03     605          JMP  (BRKV)     ;BRKV WRITTEN OVER BY DISK BOOT
FA59:             606 *
FA59:20 82 F8     607 OLDBRK   JSR  INSDS1     ;PRINT USER PC
FA5C:20 DA FA     608          JSR  RGDSP1     ;  AND REGS
FA5F:4C 65 FF     609          JMP  MON        ;GO TO MONITOR (NO PASS GO, NO $200!)
FA62:D8           610 RESET    CLD             ;DO THIS FIRST THIS TIME
FA63:20 84 FE     611          JSR  SETNORM
FA66:20 2F FB     612          JSR  INIT
FA69:20 93 FE     613          JSR  SETVID
FA6C:20 89 FE     614          JSR  SETKBD
FA6F:AD 58 C0     615 INITAN   LDA  SETAN0     ; AN0 = TTL LO
FA72:AD 5A C0     616          LDA  SETAN1     ; AN1 = TTL LO
FA75:A0 09        617          LDY  #9         ;CODE=INIT/RRA0981
FA77:20 B4 FB     618          JSR  GOTOCX     ;DO APPLE2E INIT/RRA0981
FA7A:EA           619          NOP             ;/RRA0981
FA7B:AD FF CF     620          LDA  CLRROM     ; TURN OFF EXTNSN ROM
FA7E:2C 10 C0     621          BIT  KBDSTRB    ; CLEAR KEYBOARD
FA81:D8           622 NEWMON   CLD
FA82:20 3A FF     623          JSR  BELL       ; CAUSES DELAY IF KEY BOUNCES
FA85:AD F3 03     624          LDA  SOFTEV+1   ;IS RESET HI
FA88:49 A5        625          EOR  #$A5       ;A FUNNY COMPLEMENT OF THE
FA8A:CD F4 03     626          CMP  PWREDUP    ; PWR UP BYTE ???
FA8D:D0 17   FAA6 627          BNE  PWRUP      ; NO SO PWRUP
FA8F:AD F2 03     628          LDA  SOFTEV     ; YES SEE IF COLD START
FA92:D0 0F   FAA3 629          BNE  NOFIX      ; HAS BEEN DONE YET?
FA94:A9 E0        630          LDA  #$E0       ; DOES SOFT ENTRY VECTOR POINT AT BASIC?
FA96:CD F3 03     631          CMP  SOFTEV+1
FA99:D0 08   FAA3 632          BNE  NOFIX      ; YES SO REENTER SYSTEM
FA9B:A0 03        633 FIXSEV   LDY  #3         ; NO SO POINT AT WARM START
FA9D:8C F2 03     634          STY  SOFTEV     ; FOR NEXT RESET
FAA0:4C 00 E0     635          JMP  BASIC      ; AND DO THE COLD START
FAA3:6C F2 03     636 NOFIX    JMP  (SOFTEV)   ; SOFT ENTRY VECTOR
FAA6:             637 ******************
FAA6:20 60 FB     638 PWRUP    JSR  APPLEII
FAA9:       FAA9  639 SETPG3   EQU  *          ; SET PAGE 3 VECTORS
FAA9:A2 05        640          LDX  #5
FAAB:BD FC FA     641 SETPLP   LDA  PWRCON-1,X  ; WITH CNTRL B ADRS
FAAE:9D EF 03     642          STA  BRKV-1,X   ; OF CURRENT BASIC
FAB1:CA           643          DEX
FAB2:D0 F7   FAAB 644          BNE  SETPLP
FAB4:A9 C8        645          LDA  #$C8       ; LOAD HI SLOT +1
FAB6:86 00        646          STX  LOC0       ; SETPG3 MUST RETURN X=0
FAB8:85 01        647          STA  LOC1       ; SET PTR H
FABA:             648 *
FABA:             649 * Check 3 ID bytes instead of 4.  Allows devices
FABA:             650 * other than Disk II's to be bootable.
FABA:             651 *
FABA:A0 05        652 SLOOP    LDY  #5        ;Y is byte ptr
FABC:C6 01        653          DEC  LOC1
FABE:A5 01        654          LDA  LOC1
FAC0:C9 C0        655          CMP  #$C0       ; AT LAST SLOT YET?
FAC2:F0 D7   FA9B 656          BEQ  FIXSEV     ; YES AND IT CAN'T BE A DISK
FAC4:8D F8 07     657          STA  MSLOT
FAC7:B1 00        658 NXTBYT   LDA  (LOC0),Y   ; FETCH A SLOT BYTE
FAC9:D9 01 FB     659          CMP  DISKID-1,Y  ; IS IT A DISK ??
FACC:D0 EC   FABA 660          BNE  SLOOP      ; NO, SO NEXT SLOT DOWN
FACE:88           661          DEY
FACF:88           662          DEY             ; YES, SO CHECK NEXT BYTE
FAD0:10 F5   FAC7 663          BPL  NXTBYT     ; UNTIL 3 BYTES CHECKED
FAD2:6C 00 00     664          JMP  (LOC0)     ; GO BOOT...
FAD5:             665 *
FAD5:EA           666          NOP
FAD6:EA           667          NOP
FAD7:             668 *
FAD7:20 8E FD     669 REGDSP   JSR  CROUT      ;DISPLAY USER REG CONTENTS
FADA:A9 45        670 RGDSP1   LDA  #$45       ;WITH LABELS
FADC:85 40        671          STA  A3L
FADE:A9 00        672          LDA  #$00
FAE0:85 41        673          STA  A3H
FAE2:A2 FB        674          LDX  #$FB
FAE4:A9 A0        675 RDSP1    LDA  #$A0
FAE6:20 ED FD     676          JSR  COUT
FAE9:BD 1E FA     677          LDA  RTBL-251,X
FAEC:20 ED FD     678          JSR  COUT
FAEF:A9 BD        679          LDA  #$BD
FAF1:20 ED FD     680          JSR  COUT
FAF4:B5 4A        681          LDA  ACC+5,X
FAF6:20 DA FD     682          JSR  PRBYTE
FAF9:E8           683          INX
FAFA:30 E8   FAE4 684          BMI  RDSP1
```

```
FAFC:60             685          RTS
FAFD:               686 *
FAFD:59 FA          687 PWRCON   DW   OLDBRK
FAFF:00 E0 45       688          DFB  $00,$E0,$45
FB02:20 FF 00 FF    689 DISKID   DFB  $20,$FF,$00,$FF
FB06:03 FF 3C       690          DFB  $03,$FF,$3C
FB09:C1 F0 F0 EC    691          ASC  'Apple    ]['
FB11:         FB11  692 XLTBL    EQU  *
FB11:C4 C2 C1       693          DFB  $C4,$C2,$C1
FB14:FF C3          694          DFB  $FF,$C3
FB16:FF FF FF       695          DFB  $FF,$FF,$FF
FB19:               696 *
FB19:C1 D8 D9       697 RTBL     DFB  $C1,$D8,$D9  ;REGISTER NAMES FOR REGDSP:
FB1C:D0 D3          698          DFB  $D0,$D3      ;'AXYPS'
FB1E:AD 70 C0       699 PREAD    LDA  PTRIG        ;TRIGGER PADDLES
FB21:A0 00          700          LDY  #$00         ;INIT COUNT
FB23:EA             701          NOP               ;COMPENSATE FOR 1ST COUNT
FB24:EA             702          NOP
FB25:BD 64 C0       703 PREAD2   LDA  PADDL0,X  ;COUNT Y-REG EVERY 12 USEC.
FB28:10 04    FB2E  704          BPL  RTS2D
FB2A:C8             705          INY
FB2B:D0 F8    FB25  706          BNE  PREAD2    ;EXIT AT 255 MAX
FB2D:88             707          DEY
FB2E:60             708 RTS2D    RTS
FB2F:                 1 *
FB2F:A9 00            2 INIT     LDA  #$00         ;CLR STATUS FOR DEBUG SOFTWARE
FB31:85 48            3          STA  STATUS
FB33:AD 56 C0         4          LDA  LORES
FB36:AD 54 C0         5          LDA  LOWSCR       ;INIT VIDEO MODE
FB39:AD 51 C0         6 SETTXT   LDA  TXTSET       ;SET FOR TEXT MODE
FB3C:A9 00            7          LDA  #$00         ;FULL SCREEN WINDOW
FB3E:F0 08    FB48    8          BEQ  SETWND
FB40:AD 50 C0         9 SETGR    LDA  TXTCLR       ;SET FOR GRAPHICS MODE
FB43:AD 53 C0        10          LDA  MIXSET       ;LOWER 4 LINES AS TEXT WINDOW
FB46:20 36 F8        11          JSR  CLRTOP
FB49:A9 14           12          LDA  #$14
FB4B:85 22           13 SETWND   STA  WNDTOP       ;SET FOR 40 COL WINDOW
FB4D:A9 00           14          LDA  #$00         ;TOP IN A-REG,
FB4F:85 20           15          STA  WNDLFT       ; BOTTOM AT LINE $24
FB51:A0 0C           16          LDY  #$C          ;CODE=SETWND /RRA0981
FB53:D0 5F    FBB4   17          BNE  GOTOCX
FB55:A9 18           18          LDA  #$18
FB57:85 23           19          STA  WNDBTM
FB59:A9 17           20          LDA  #$17         ;VTAB TO ROW 23
FB5B:85 25           21 TABV     STA  CV           ;VTABS TO ROW IN A-REG
FB5D:4C 22 FC        22          JMP  VTAB
FB60:                23 *
FB60:20 58 FC        24 APPLEII  JSR  HOME         ;CLEAR THE SCRN
FB63:A0 09           25          LDY  #9
FB65:B9 09 FF        26 STITLE   LDA  TITLE-1,Y  ;GET A CHAR
FB68:99 0E 04        27          STA  LINE1+14,Y  ;PUT IT AT TOP CENTER OF SCREEN
FB6B:88              28          DEY
FB6C:D0 F7    FB65   29          BNE  STITLE
FB6E:60              30          RTS
```

```
FB6F:                31 *
FB6F:AD F3 03        32 SETPWRC  LDA  SOFTEV+1   ;ROUTINE TO CALCULATE THE 'FUNNY
FB72:49 A5           33          EOR  #$A5       ;COMPLEMENT' FOR THE RESET VECTOR
FB74:8D F4 03        34          STA  PWREDUP
FB77:60              35          RTS
FB78:                36 *
FB78:         FB78   37 VIDWAIT  EQU  *          ;CHECK FOR A PAUSE (CONTROL-S).
FB78:C9 8D           38          CMP  #$8D       ;ONLY WHEN I HAVE A CR
FB7A:D0 18    FB94   39          BNE  NOWAIT     ;NOT SO, DO REGULAR
FB7C:AC 00 C0        40          LDY  KBD        ;IS KEY PRESSED?
FB7F:10 13    FB94   41          BPL  NOWAIT     ;NO.
FB81:C0 93           42          CPY  #$93       ;YES -- IS IT CTRL-S?
FB83:D0 0F    FB94   43          BNE  NOWAIT     ;NOPE - IGNORE
FB85:2C 10 C0        44          BIT  KBDSTRB    ;CLEAR STROBE
FB88:AC 00 C0        45 KBDWAIT  LDY  KBD        ;WAIT TILL NEXT KEY TO RESUME
FB8B:10 FB    FB88   46          BPL  KBDWAIT    ;WAIT FOR KEYPRESS
FB8D:C0 83           47          CPY  #$83       ;IS IT CONTROL-C?
FB8F:F0 03    FB94   48          BEQ  NOWAIT     ;YES, SO LEAVE IT
FB91:2C 10 C0        49          BIT  KBDSTRB    ;CLR STROBE
FB94:4C FD FB        50 NOWAIT   JMP  VIDOUT     ;DO AS BEFORE
FB97:                51 *
FB97:38              52 ESCOLD   SEC             ;INSURE CARRY SET
FB98:4C 2C FC        53          JMP  ESC1
FB9B:A8              54 ESCNOW   TAY             ;USE CHAR AS INDEX
FB9C:B9 48 FA        55          LDA  XLTBL-$C9,Y  ;TRANSLATE IJKM TO CBAD
FB9F:20 97 FB        56          JSR  ESCOLD     ;DO THE CURSOR MOTION
FBA2:20 21 FD        57          JSR  RDESC      ;GET IJKM, ijkm, ARROWS/RRA0981
FBA5:C9 CE           58 ESCNEW   CMP  #$CE       ;IS THIS AN 'N'?
FBA7:B0 EE    FB97   59          BCS  ESCOLD     ;'N' OR GREATER - DO IT!
FBA9:C9 C9           60          CMP  #$C9       ;LESS THAN 'I'?
FBAB:90 EA    FB97   61          BCC  ESCOLD     ;YES, SO DO OLD WAY
FBAD:C9 CC           62          CMP  #$CC       ;IS IT AN 'L'?
FBAF:F0 E6    FB97   63          BEQ  ESCOLD     ;DO NORMAL
FBB1:D0 E8    FB9B   64          BNE  ESCNOW     ;GO DO IT
FBB3:                65 *
FBB3:         C006   66 SETSLOTCXROM EQU $C006  ;/RRA0981
FBB3:         C007   67 SETINTCXROM EQU $C007   ;/RRA0981
FBB3:         C015   68 RDCXROM  EQU  $C015     ;/RRA0981
FBB3:                69 *                              /RRA0981
FBB3:06              70 VERSION  DFB  $06        ;FOR IDCHECK/RRA0981
FBB4:                71 *
FBB4:         FBB4   72 GOTOCX   EQU  *          ;/RRA0981
FBB4:2C 15 C0        73          BIT  RDCXROM    ;GET CURRENT STATE/RRA0981
FBB7:08              74          PHP             ;SAVE ROMBANK STATE/RRA0981
FBB8:8D 07 C0        75          STA  SETINTCXROM  ;SET ROMS ON/RRA0981
FBBB:4C 00 C1        76          JMP  C1ORG      ;=>OFF TO CXSPACE/RRA0981
FBBE:                77 *
FBBE:00              78          DFB  0
FBBF:00              79          DFB  0
FBC0:                80 *
FBC0:E0              81 ZIDBYTE  DFB  $E0       ;//e ROM rev ID byte
FBC1:                82 *
FBC1:48              83 BASCALC  PHA             ;CALC BASE ADDR IN BASL,H
FBC2:4A              84          LSR  A         ;FOR GIVEN LINE NO.
```

```
FBC3:29 03          85          AND  #$03       ; 0<=LINE NO.<=$17
FBC5:09 04          86          ORA  #$04       ;ARG = 000ABCDE, GENERATE
FBC7:85 29          87          STA  BASH       ; BASH = 000001CD
FBC9:68             88          PLA             ; AND
FBCA:29 18          89          AND  #$18       ; BASL = EABAB000
FBCC:90 02   FBD0   90          BCC  BASCLC2
FBCE:69 7F          91          ADC  #$7F
FBD0:85 28          92 BASCLC2  STA  BASL
FBD2:0A             93          ASL  A
FBD3:0A             94          ASL  A
FBD4:05 28          95          ORA  BASL
FBD6:85 28          96          STA  BASL
FBD8:60             97          RTS
FBD9:               98 *
FBD9:C9 87          99 BELL1    CMP  #$87       ;BELL CHAR? (CONTROL-G)
FBDB:D0 12   FBEF  100          BNE  RTS2B      ; NO, RETURN.
FBDD:A9 40         101          LDA  #$40       ; YES...
FBDF:20 A8 FC      102          JSR  WAIT       ;DELAY .01 SECONDS
FBE2:A0 C0         103          LDY  #$C0
FBE4:A9 0C         104 BELL2    LDA  #$0C       ;TOGGLE SPEAKER AT 1 KHZ
FBE6:20 A8 FC      105          JSR  WAIT       ; FOR .1 SEC.
FBE9:AD 30 C0      106          LDA  SPKR
FBEC:88            107          DEY
FBED:D0 F5   FBE4  108          BNE  BELL2
FBEF:60            109 RTS2B    RTS
FBF0:              110 *
FBF0:A4 24         111 STORADV  LDY  CH         ;CURSOR H INDEX TO Y-REG
FBF2:91 28         112          STA  (BASL),Y   ;STORE CHAR IN LINE
FBF4:E6 24         113 ADVANCE  INC  CH         ;INCREMENT CURSOR H INDEX
FBF6:A5 24         114          LDA  CH         ; (MOVE RIGHT)
FBF8:C5 21         115          CMP  WNDWDTH    ;BEYOND WINDOW WIDTH?
FBFA:B0 66   FC62  116          BCS  CR         ; YES, CR TO NEXT LINE.
FBFC:60            117 RTS3     RTS             ; NO, RETURN.
FBFD:              118 *
FBFD:C9 A0         119 VIDOUT   CMP  #$A0       ;CONTROL CHAR?
FBFF:B0 EF   FBF0  120          BCS  STORADV    ; NO, OUTPUT IT.
FC01:A8            121          TAY             ;INVERSE VIDEO?
FC02:10 EC   FBF0  122          BPL  STORADV    ; YES, OUTPUT IT.
FC04:C9 8D         123          CMP  #$8D       ;CR?
FC06:F0 5A   FC62  124          BEQ  CR         ; YES.
FC08:C9 8A         125          CMP  #$8A       ;LINE FEED?
FC0A:F0 5A   FC66  126          BEQ  LF         ; IF SO, DO IT.
FC0C:C9 88         127          CMP  #$88       ;BACK SPACE? (CONTROL-H)
FC0E:D0 C9   FBD9  128          BNE  BELL1      ; NO, CHECK FOR BELL.
FC10:C6 24         129 BS       DEC  CH         ;DECREMENT CURSOR H INDEX
FC12:10 E8   FBFC  130          BPL  RTS3       ;IF POSITIVE, OK; ELSE MOVE UP.
FC14:A5 21         131          LDA  WNDWDTH    ;SET CH TO WINDOW WIDTH - 1.
FC16:85 24         132          STA  CH
FC18:C6 24         133          DEC  CH         ;(RIGHTMOST SCREEN POS)
FC1A:A5 22         134 UP       LDA  WNDTOP     ;CURSOR V INDEX
FC1C:C5 25         135          CMP  CV
FC1E:B0 DC   FBFC  136          BCS  RTS3       ;IF TOP LINE THEN RETURN
FC20:C6 25         137          DEC  CV         ;DECR CURSOR V INDEX
FC22:              138 *
```

```
FC22:A5 25         139 VTAB     LDA  CV         ;GET CURSOR V INDEX
FC24:85 28         140 VTABZ    STA  BASL       ;temporarily save Acc
FC26:98            141          TYA             ;and Y
FC27:A0 04         142          LDY  #$4        ;this is VTABZ call
FC29:D0 89   FBB4  143 GOTOCX1  BNE  GOTOCX     ;=> always perform call
FC2B:              144 *
FC2B:EA            145          NOP
FC2C:              146 *
FC2C:49 C0         147 ESC1     EOR  #$C0       ;ESC '@'?
FC2E:F0 28   FC58  148          BEQ  HOME       ; IF SO DO HOME AND CLEAR
FC30:69 FD         149          ADC  #$FD       ;ESC-A OR B CHECK
FC32:90 C0   FBF4  150          BCC  ADVANCE    ; A, ADVANCE
FC34:F0 DA   FC10  151          BEQ  BS         ; B, BACKSPACE
FC36:69 FD         152          ADC  #$FD       ;ESC-C OR D CHECK
FC38:90 2C   FC66  153          BCC  LF         ; C, DOWN
FC3A:F0 DE   FC1A  154          BEQ  UP         ; D, GO UP
FC3C:69 FD         155          ADC  #$FD       ;ESC-E OR F CKECK
FC3E:90 5C   FC9C  156          BCC  CLREOL     ; E, CLEAR TO END OF LINE
FC40:D0 BA   FBFC  157          BNE  RTS3       ; ELSE NOT F,RETURN
FC42:              158 *
FC42:        FC42  159 CLREOP   EQU  *          ;/RRA0981
FC42:A0 0A         160          LDY  #$A        ;CODE=CLREOP/RRA0981
FC44:D0 E3   FC29  161          BNE  GOTOCX1    ;DO 40/80 /RRA0981
FC46:              162 *
FC46:2C 1F C0      163 NEWVW    BIT  RD80VID    ;in 80 columns?
FC49:10 04   FC4F  164          BPL  NEWVW1     ;=>not 80 columns
FC4B:A0 00         165          LDY  #$0        ;Print a character
FC4D:F0 0B   FC5A  166          BEQ  GOTOCX3    ;through video firmware
FC4F:98            167 NEWVW1   TYA             ;get masked character
FC50:48            168          PHA             ;and set up for vidwait
FC51:20 78 FB      169          JSR  VIDWAIT    ;print the character
FC54:68            170          PLA             ;restore Acc
FC55:A4 35         171          LDY  YSAV1      ;and Y
FC57:60            172          RTS
FC58:              173 *
FC58:        FC58  174 HOME     EQU  *          ;/RRA0981
FC58:A0 05         175          LDY  #5         ;CODE=HOME/RRA0981
FC5A:4C B4 FB      176 GOTOCX3  JMP  GOTOCX     ;do 40/80
FC5D:              177 *
FC5D:EA            178          NOP
FC5E:EA            179          NOP
FC5F:EA            180          NOP
FC60:EA            181          NOP
FC61:EA            182          NOP
FC62:              183 *
FC62:A9 00         184 CR       LDA  #$00       ;CURSOR TO LEFT OF INDEX
FC64:85 24         185          STA  CH         ;(RET CURSOR H=0)
FC66:E6 25         186 LF       INC  CV         ;INCR CURSOR V. (DOWN 1 LINE)
FC68:A5 25         187          LDA  CV
FC6A:C5 23         188          CMP  WNDBTM     ;OFF SCREEN?
FC6C:90 B6   FC24  189          BCC  VTABZ      ;  NO, SET BASE ADDR
FC6E:C6 25         190          DEC  CV         ;DECR CURSOR V. (BACK TO BOTTOM)
FC70:              191 *
FC70:        FC70  192 SCROLL   EQU  *          ;/RRA0981
```

```
FC70:A0 06        193          LDY  #6         ;CODE=SCROLL/RRA0981
FC72:D0 B5  FC29  194          BNE  GOTOCX1    ;DO 40/80 /RRA0981
FC74:             195 *
FC74:             196 * Jump here to swap out ROMs
FC74:             197 * for interrupt handlers in peripheral cards
FC74:             198 *
FC74:8D 06 C0     199 IRQUSER STA  SETSLOTCXROM ;switch in slots
FC77:6C FE 03     200          JMP  ($3FE)     ;and jump to user
FC7A:             201 *
FC7A:             202 * IRQDONE ($C3F4) jumps here after interrupt
FC7A:             203 * because this cannot be done from $Cn00 space
FC7A:             204 *
FC7A:68           205 IRQDONE2 PLA             ;Fix $C800 space
FC7B:8D F8 07     206          STA  MSLOT      ;restore MSLOT
FC7E:C9 C1        207          CMP  #$C1       ;valid Cn?
FC80:90 0D  FC8F  208          BCC  IRQNOSLT
FC82:8D FF CF     209          STA  $CFFF      ;Deselect all $C800
FC85:A0 00        210          LDY  #0
FC87:A6 01        211          LDX  $1
FC89:85 01        212          STA  $1
FC8B:B1 00        213          LDA  ($0),Y     ;do $Cn00 reference
FC8D:86 01        214          STX  $1         ;fix zp location
FC8F:8D 07 C0     215 IRQNOSLT STA SETINTCXROM
FC92:4C 7C C4     216          JMP  IRQFIX     ;and restore the machine state
FC95:             217 *
FC95:90 02  FC99  218 DOCOUT1 BCC  DOCOUT2    ;don't mask controls
FC97:25 32        219          AND  INVFLG     ;apply inverse mask
FC99:4C F7 FD     220 DOCOUT2 JMP  COUTZ1     ;go back to COUT1
FC9C:             221 *
FC9C:       0000  222          DS   F8ORG+$49C-*,0 ;pad to clreol
FC9C:             223 *
FC9C:             224 * Note: bytes CLREOL and CLREOLZ ($38 and $18)
FC9C:             225 * are used by slot test at $FBB7.
FC9C:             226 *
FC9C:38           227 CLREOL  SEC              ;say it is EOL
FC9D:90           228          DFB  $90        ;'BCC' opcode
FC9E:18           229 CLREOLZ CLC              ;say it is EOLZ
FC9F:84 2A        230          STY  BAS2L      ;save Y in temp
FCA1:A0 07        231          LDY  #7         ;code=CLREOL
FCA3:B0 78  FD1D  232          BCS  GOTOCX2    ;do it
FCA5:C8           233          INY             ;code 8=CLREOLZ
FCA6:D0 75  FD1D  234          BNE  GOTOCX2
FCA8:             235 *
FCA8:38           236 WAIT     SEC              ;enter with count in A
FCA9:48           237 WAIT2    PHA              ;delay is:
FCAA:E9 01        238 WAIT3    SBC  #$01
FCAC:D0 FC  FCAA  239          BNE  WAIT3      ;13+11*A+5*A*A cycles
FCAE:68           240          PLA              ;@ 1.023 usec per cycle
FCAF:E9 01        241          SBC  #$01
FCB1:D0 F6  FCA9  242          BNE  WAIT2
FCB3:60           243          RTS
FCB4:             244 *
FCB4:E6 42        245 NXTA4    INC  A4L        ;INCR 2-BYTE A4
FCB6:D0 02  FCBA  246          BNE  NXTA1      ; AND A1
FCB8:E6 43        247          INC  A4H
FCBA:A5 3C        248 NXTA1    LDA  A1L        ;INCR 2-BYTE A1.
FCBC:C5 3E        249          CMP  A2L        ; AND COMPARE TO A2
FCBE:A5 3D        250          LDA  A1H        ; (CARRY SET IF >=)
FCC0:E5 3F        251          SBC  A2H
FCC2:E6 3C        252          INC  A1L
FCC4:D0 02  FCC8  253          BNE  RTS4B
FCC6:E6 3D        254          INC  A1H
FCC8:60           255 RTS4B    RTS
FCC9:             256 *
FCC9:8D 07 C0     257 HEADR    STA  SETINTCXROM ;force internal ROM
FCCC:20 67 C5     258          JSR  XHEADER    ;write header
FCCF:4C C5 FE     259          JMP  RETCX1     ;force slots and return
FCD2:             260 *
FCD2:             261 * For the disassembler to be able to do I/O to slots,
FCD2:             262 * it cannot make calls to the I/O routines with the
FCD2:             263 * internal ROM switched in.  This stuff switches the
FCD2:             264 * ROM out for such instances.
FCD2:             265 *
FCD2:8D 06 C0     266 ERR3     STA  SETSLOTCXROM ;force slot ROM
FCD5:20 4A F9     267          JSR  PRBL2      ;tab to the error
FCD8:A9 DE        268          LDA  #$DE       ;to print a caret "^"
FCDA:20 ED FD     269          JSR  COUT       ;print it
FCDD:20 3A FF     270          JSR  BELL       ;and beep
FCE0:4C F0 FC     271          JMP  GETINST1   ;and go get next instruction
FCE3:             272 *
FCE3:8D 06 C0     273 DISLIN   STA  SETSLOTCXROM ;force slot ROM
FCE6:20 D0 F8     274          JSR  INSTDSP    ;disassemble the instruction
FCE9:20 53 F9     275          JSR  PCADJ      ;calculate new PC
FCEC:84 3B        276          STY  PCH        ;and update PC
FCEE:85 3A        277          STA  PCL
FCF0:             278 *
FCF0:             279 * NOTE: The entry point GETINST1 is hard-coded in
FCF0:             280 * BFUNC of the Video firmware.
FCF0:             281 *
FCF0:A9 A1        282 GETINST1 LDA #$A1        ;get mini-prompt "!"
FCF2:85 33        283          STA  PROMPT
FCF4:20 67 FD     284          JSR  GETLNZ     ;go get a line of input
FCF7:8D 07 C0     285          STA  SETINTCXROM ;force internal ROM
FCFA:4C 9C CF     286          JMP  DOINST     ;and return to CX space
FCFD:             287 *
FCFD:B9 00 02     288 UPMON    LDA  IN,Y       ;get character
FD00:C8           289          INY               ;point to next char
FD01:C9 E1        290          CMP  #$E1       ;is it lowercase?
FD03:90 06  FD0B  291          BCC  UPMON2     ;=>nope
FD05:C9 FB        292          CMP  #$FB       ;lowercase?
FD07:B0 02  FD0B  293          BCS  UPMON2     ;=>nope
FD09:29 DF        294          AND  #$DF       ;else upshift
FD0B:60           295 UPMON2   RTS
FD0C:             296 *
FD0C:A0 0B        297 RDKEY    LDY  #$B        ;code=RDKEY
FD0E:D0 03  FD13  298          BNE  RDKEY0     ;allow $FD10 entry
FD10:4C 18 FD     299 FD10     JMP  RDKEY1     ;if enter here, do nothing
FD13:20 B4 FB     300 RDKEY0   JSR  GOTOCX     ;display cursor
```

```
FD16:EA           301         NOP
FD17:EA           302         NOP
FD18:6C 38 00     303 RDKEY1  JMP  (KSWL)     ;GO TO USER KEY-IN
FD1B:             304 *
FD1B:       FD1B  305 KEYIN   EQU  *
FD1B:A0 03        306         LDY  #3          ;RDKEY/RRA0981
FD1D:4C B4 FB     307 GOTOCX2 JMP  GOTOCX      ;/RRA0981
FD20:EA           308         NOP              ;/RRA0981
FD21:             309 *
FD21:       FD21  310 RDESC   EQU  *
FD21:20 0C FD     311         JSR  RDKEY       ;GET A KEY
FD24:A0 01        312         LDY  #1          ;CODE=FIXIT
FD26:D0 F5   FD1D 313         BNE  GOTOCX2     ;=>always
FD28:             314 *
FD28:             315 * Flag to the video firmware that escapes are allowed.
FD28:             316 * This routine is called by RDCHAR which is called by
FD28:             317 * GETLN.  The high bit of MSLOT is set by all cards
FD28:             318 * that use the C800 space.
FD28:             319 *
FD28:4E F8 07     320 NEWRDKEY LSR MSLOT     ;<128 means escape allowed
FD2B:4C 0C FD     321         JMP  RDKEY       ;now read the key
FD2E:EA           322         NOP
FD2F:             323 *
FD2F:20 21 FD     324 ESC     JSR  RDESC       ;/RRA0981
FD32:20 A5 FB     325         JSR  ESCNEW      ;HANDLE ESC FUNCTION.
FD35:20 28 FD     326 RDCHAR  JSR  NEWRDKEY    ;Flag RDCHAR and read key
FD38:C9 9B        327         CMP  #$9B        ;'ESC'?
FD3A:F0 F3   FD2F 328         BEQ  ESC         ;  YES, DON'T RETURN.
FD3C:60           329         RTS
FD3D:             330 *
FD3D:A0 0F        331 PICKFIX LDY  #$F         ;code = fixpick
FD3F:20 B4 FB     332         JSR  GOTOCX      ;do 80 column pick
FD42:A4 24        333         LDY  CH          ;restore Y
FD44:9D 00 02     334         STA  IN,X        ;and save new character
FD47:             335 *#03 AUTOST2        Auto-Start Monitor ROM 27-AUG-84        PAGE 20

FD47:20 ED FD     336 NOTCR   JSR  COUT        ;echo typed char
FD4A:EA           337         NOP
FD4B:EA           338         NOP
FD4C:EA           339         NOP
FD4D:BD 00 02     340         LDA  IN,X
FD50:C9 88        341         CMP  #$88        ;CHECK FOR EDIT KEYS
FD52:F0 1D   FD71 342         BEQ  BCKSPC      ;  - BACKSPACE
FD54:C9 98        343         CMP  #$98
FD56:F0 0A   FD62 344         BEQ  CANCEL      ;  - CONTROL-X
FD58:E0 F8        345         CPX  #$F8
FD5A:90 03   FD5F 346         BCC  NOTCR1      ;MARGIN?
FD5C:20 3A FF     347         JSR  BELL        ; YES, SOUND BELL
FD5F:E8           348 NOTCR1  INX              ;ADVANCE INPUT INDEX
FD60:D0 13   FD75 349         BNE  NXTCHAR
FD62:             350 *
FD62:A9 DC        351 CANCEL  LDA  #$DC        ;BACKSLASH AFTER CANCELLED LINE
FD64:20 ED FD     352         JSR  COUT
FD67:20 8E FD     353 GETLNZ  JSR  CROUT       ;OUTPUT 'CR'
FD6A:A5 33        354 GETLN   LDA  PROMPT      ;OUTPUT PROMPT CHAR
FD6C:20 ED FD     355         JSR  COUT
FD6F:A2 01        356         LDX  #$01        ;INIT INPUT INDEX
FD71:8A           357 BCKSPC  TXA
FD72:F0 F3   FD67 358         BEQ  GETLNZ      ;WILL BACKSPACE TO 0
FD74:CA           359         DEX
FD75:20 35 FD     360 NXTCHAR JSR  RDCHAR
FD78:C9 95        361         CMP  #$95        ;USE SCREEN CHAR
FD7A:D0 08   FD84 362         BNE  ADDINP      ; FOR CONTROL-U
FD7C:B1 28        363         LDA  (BASL),Y    ;do 40 column pick
FD7E:2C 1F C0     364         BIT  RD80VID     ;80 columns?
FD81:30 BA   FD3D 365         BMI  PICKFIX     ;=>yes, fix it
FD83:EA           366         NOP
FD84:9D 00 02     367 ADDINP  STA  IN,X         ;ADD TO INPUT BUFFER
FD87:C9 8D        368         CMP  #$8D
FD89:D0 BC   FD47 369         BNE  NOTCR
FD8B:20 9C FC     370         JSR  CLREOL      ;CLR TO EOL IF CR
FD8E:A9 8D        371 CROUT   LDA  #$8D
FD90:D0 5B   FDED 372         BNE  COUT        ;(ALWAYS)
FD92:             373 *
FD92:A4 3D        374 PRA1    LDY  A1H         ;PRINT CR,A1 IN HEX
FD94:A6 3C        375         LDX  A1L
FD96:20 8E FD     376 PRYX2   JSR  CROUT
FD99:20 40 F9     377         JSR  PRNTYX
FD9C:A0 00        378         LDY  #$00
FD9E:A9 AD        379         LDA  #$AD        ;PRINT '-'
FDA0:4C ED FD     380         JMP  COUT
FDA3:             381 *
FDA3:A5 3C        382 XAM8    LDA  A1L
FDA5:09 07        383         ORA  #$07        ;SET TO FINISH AT
FDA7:85 3E        384         STA  A2L         ; MOD 8=7
FDA9:A5 3D        385         LDA  A1H
FDAB:85 3F        386         STA  A2H
FDAD:A5 3C        387 MO
D8CHK LDA  A1L
FDAF:29 07        388         AND  #$07
FDB1:D0 03   FDB6 389         BNE  DATAOUT
FDB3:20 92 FD     390 XAM     JSR  PRA1
FDB6:A9 A0        391 DATAOUT LDA  #$A0
FDB8:20 ED FD     392         JSR  COUT        ;OUTPUT BLANK
FDBB:B1 3C        393         LDA  (A1L),Y
FDBD:20 DA FD     394         JSR  PRBYTE      ;OUTPUT BYTE IN HEX
FDC0:20 BA FC     395         JSR  NXTA1
FDC3:90 E8   FDAD 396         BCC  MOD8CHK     ;NOT DONE YET. GO CHECK MOD 8
FDC5:60           397 RTS4C   RTS              ;DONE.
FDC6:             398 *
FDC6:4A           399 XAMPM   LSR  A           ;DETERMINE IF MONITOR MODE IS
FDC7:90 EA   FDB3 400         BCC  XAM         ; EXAMINE, ADD OR SUBTRACT
FDC9:4A           401         LSR  A
FDCA:4A           402         LSR  A
FDCB:A5 3E        403         LDA  A2L
FDCD:90 02   FDD1 404         BCC  ADD
FDCF:49 FF        405         EOR  #$FF        ;FORM 2'S COMPLEMENT FOR SUBTRACT.
FDD1:65 3C        406 ADD     ADC  A1L
```

```
FDD3:48          407          PHA
FDD4:A9 BD       408          LDA  #$BD       ;PRINT '=', THEN RESULT
FDD6:20 ED FD    409          JSR  COUT
FDD9:68          410          PLA
FDDA:48          411 PRBYTE   PHA              ;PRINT BYTE AS 2 HEX DIGITS
FDDB:4A          412          LSR  A          ; (DESTROYS A-REG)
FDDC:4A          413          LSR  A
FDDD:4A          414          LSR  A
FDDE:4A          415          LSR  A
FDDF:20 E5 FD    416          JSR  PRHEXZ
FDE2:68          417          PLA
FDE3:29 0F       418 PRHEX    AND  #$0F       ;PRINT HEX DIGIT IN A-REG
FDE5:09 B0       419 PRHEXZ   ORA  #$B0       ;LSBITS ONLY.
FDE7:C9 BA       420          CMP  #$BA
FDE9:90 02   FDED 421          BCC  COUT
FDEB:69 06       422          ADC  #$06
FDED:            423 *
FDED:6C 36 00    424 COUT     JMP  (CSWL)     ;VECTOR TO USER OUTPUT ROUTINE
FDF0:            425 *
FDF0:48          426 COUT1    PHA             ;save original character
FDF1:C9 A0       427          CMP  #$A0       ;is it a control?
FDF3:4C 95 FC    428          JMP  DOCOUT1    ;=>mask if not; return to COUTZ1
FDF6:            429 *
FDF6:48          430 COUTZ    PHA             ;save original character
FDF7:84 35       431 COUTZ1   STY  YSAV1      ;save Y
FDF9:A8          432          TAY              ;save masked character
FDFA:68          433          PLA             ;get original char
FDFB:4C 46 FC    434          JMP  NEWVW      ;new entry to vidwait
FDFE:EA          435          NOP
FDFF:EA          436          NOP
FE00:            437 *
FE00:C6 34       438 BL1      DEC  YSAV
FE02:F0 9F   FDA3 439          BEQ  XAM8
FE04:CA          440 BLANK    DEX             ;BLANK TO MON
FE05:D0 16   FE1D 441          BNE  SETMDZ     ;AFTER BLANK
FE07:C9 BA       442          CMP  #$BA       ;DATA STORE MODE?
FE09:D0 BB   FDC6 443          BNE  XAMPM      ; NO; XAM, ADD, OR SUBTRACT.
FE0B:85 31       444 STOR     STA  MODE       ;KEEP IN STORE MODE
FE0D:A5 3E       445          LDA  A2L
FE0F:91 40       446          STA  (A3L),Y    ;STORE AS LOW BYTE AT (A3)
FE11:E6 40       447          INC  A3L
FE13:D0 02   FE17 448          BNE  RTS5       ;INCR A3, RETURN.
FE15:E6 41       449          INC  A3H
FE17:60          450 RTS5     RTS
FE18:            451 *
FE18:A4 34       452 SETMODE  LDY  YSAV       ;SAVE CONVERTED ':', '+',
FE1A:B9 FF 01    453          LDA  IN-1,Y     ; '-', '.' AS MODE
FE1D:85 31       454 SETMDZ   STA  MODE
FE1F:60          455          RTS
FE20:            456 *
FE20:A2 01       457 LT       LDX  #$01
FE22:B5 3E       458 LT2      LDA  A2L,X      ;COPY A2 (2 BYTES) TO
FE24:95 42       459          STA  A4L,X      ; A4 AND A5
FE26:95 44       460          STA  A5L,X
```

```
FE28:CA          461          DEX
FE29:10 F7   FE22 462          BPL  LT2
FE2B:60          463          RTS
FE2C:            464 *
FE2C:B1 3C       465 MOVE     LDA  (A1L),Y    ;MOVE (A1) THRU (A2) TO (A4)
FE2E:91 42       466          STA  (A4L),Y
FE30:20 B4 FC    467          JSR  NXTA4
FE33:90 F7   FE2C 468          BCC  MOVE
FE35:60          469          RTS
FE36:            470 *
FE36:B1 3C       471 VFY      LDA  (A1L),Y    ;VERIFY (A1) THRU (A2)
FE38:D1 42       472          CMP  (A4L),Y    ; WITH (A4)
FE3A:F0 1C   FE58 473          BEQ  VFYOK
FE3C:20 92 FD    474          JSR  PRA1
FE3F:B1 3C       475          LDA  (A1L),Y
FE41:20 DA FD    476          JSR  PRBYTE
FE44:A9 A0       477          LDA  #$A0
FE46:20 ED FD    478          JSR  COUT
FE49:A9 A8       479          LDA  #$A8
FE4B:20 ED FD    480          JSR  COUT
FE4E:B1 42       481          LDA  (A4L),Y
FE50:20 DA FD    482          JSR  PRBYTE
FE53:A9 A9       483          LDA  #$A9
FE55:20 ED FD    484          JSR  COUT
FE58:20 B4 FC    485 VFYOK    JSR  NXTA4
FE5B:90 D9   FE36 486          BCC  VFY
FE5D:60          487          RTS
FE5E:            488 *
FE5E:20 75 FE    489 LIST     JSR  A1PC       ;MOVE A1 (2 BYTES) TO
FE61:A9 14       490          LDA  #$14       ; PC IF SPEC'D AND
FE63:48          491 LIST2    PHA             ; DISASSEMBLE 20 INSTRUCTIONS.
FE64:20 D0 F8    492          JSR  INSTDSP
FE67:20 53 F9    493          JSR  PCADJ      ;ADJUST PC AFTER EACH INSTRUCTION.
FE6A:85 3A       494          STA  PCL
FE6C:84 3B       495          STY  PCH
FE6E:68          496          PLA
FE6F:38          497          SEC
FE70:E9 01       498          SBC  #$01       ;NEXT OF 20 INSTRUCTIONS
FE72:D0 EF   FE63 499          BNE  LIST2
FE74:60          500          RTS
FE75:            501 *
FE75:8A          502 A1PC     TXA             ;IF USER SPECIFIED AN ADDRESS,
FE76:F0 07   FE7F 503          BEQ  A1PCRTS    ; COPY IT FROM A1 TO PC.
FE78:B5 3C       504 A1PCLP   LDA  A1L,X      ;YEP, SO COPY IT.
FE7A:95 3A       505          STA  PCL,X
FE7C:CA          506          DEX
FE7D:10 F9   FE78 507          BPL  A1PCLP
FE7F:60          508 A1PCRTS  RTS
FE80:            509 *
FE80:A0 3F       510 SETINV   LDY  #$3F       ;SET FOR INVERSE VID
FE82:D0 02   FE86 511          BNE  SETIFLG    ; VIA COUT1
FE84:A0 FF       512 SETNORM  LDY  #$FF       ;SET FOR NORMAL VID
FE86:84 32       513 SETIFLG  STY  INVFLG
FF88:60          514          RTS
```

```
FE89:                 515 *
FE89:A9 00            516 SETKBD  LDA  #$00        ;DO 'IN#0'
FE8B:85 3E            517 INPORT  STA  A2L         ;DO 'IN#AREG'
FE8D:A2 38            518 INPRT   LDX  #KSWL
FE8F:A0 1B            519         LDY  #KEYIN
FE91:D0 08    FE9B    520         BNE  IOPRT
FE93:                 521 *
FE93:A9 00            522 SETVID  LDA  #$00        ;DO 'PR#0'
FE95:85 3E            523 OUTPORT STA  A2L         ;DO 'PR#AREG'
FE97:A2 36            524 OUTPRT  LDX  #CSWL
FE99:A0 F0            525         LDY  #COUT1
FE9B:A5 3E            526 IOPRT   LDA  A2L         ;SET INPUT/OUTPUT VECTORS
FE9D:29 0F            527         AND  #$0F
FE9F:F0 04    FEA5    528         BEQ  IOPRT1
FEA1:09 C0            529         ORA  #<IOADR
FEA3:A0 00            530         LDY  #$00
FEA5:94 00            531 IOPRT1  STY  LOC0,X     ;save low byte of hook
FEA7:95 01            532         STA  LOC1,X     ;save acc
FEA9:A0 0E            533         LDY  #$E         ;code=PR#/IN#
FEAB:4C B4 FB         534 GOTOCX4 JMP  GOTOCX     ;perform call
FEAE:                 535 *
FEAE:EA               536         NOP
FEAF:00               537 CKSUMFIX DFB 0           ;/RRA0981
FEB0:                 538 *     ;-->CORRECT CKSUM AT CREATE TIME.
FEB0:4C 00 E0         539 XBASIC  JMP  BASIC       ;TO BASIC, COLD START
FEB3:4C 03 E0         540 BASCONT JMP  BASIC2      ;TO BASIC, WARM START
FEB6:20 75 FE         541 GO      JSR  A1PC        ;ADDR TO PC IF SPECIFIED
FEB9:20 3F FF         542         JSR  RESTORE     ;RESTORE FAKE REGISTERS
FEBC:6C 3A 00         543         JMP  (PCL)       ;AND GO!
FEBF:4C D7 FA         544 REGZ    JMP  REGDSP      ;GO DISPLAY REGISTERS
FEC2:60               545 TRACE   RTS              ;TRACE IS GONE
FEC3:EA               546         NOP
FEC4:60               547 STEPZ   RTS              ;STEP IS GONE
FEC5:                 548 *
FEC5:                 549 * Return here from GOTOCX
FEC5:                 550 *
FEC5:                 551 * NOTE: This address is hard-coded in BFUNC of the
FEC5:                 552 * video firmware
FEC5:                 553 *
FEC5:8D 06 C0         554 RETCX1  STA  SETSLOTCXROM ;restore bank
FEC8:60               555 RETCX2  RTS              ;simply return
FEC9:EA               556         NOP
FECA:                 557 *
FECA:4C F8 03         558 USR     JMP  USRADR      ;JUMP TO CONTROL-Y VECTOR IN RAM
FECD:                 559 *
FECD:A9 40            560 WRITE   LDA  #$40
FECF:8D 07 C0         561 WRT2    STA  SETINTCXROM ;set internal ROM
FED2:20 AA C5         562         JSR  WRITE2      ;write to tape
FED5:F0 2C    FF03    563         BEQ  RD2         ;=>always set slots, beep
FED7:                 564 *
FED7:                 565 * SEARCH is called with a Monitor command of the form
FED7:                 566 * HHLL<ADR1.ADR2  in which ADR1 < ADR2 and LL precedes HH
FED7:                 567 * in memory.  If HH is 0, or omitted (LL<ADR1.ADR2), then
FED7:                 568 * the single byte LL is searched for.  You cannot search for
FED7:                 569 * a two byte pair with a high byte of 0.  A list of all
FED7:                 570 * adresses containing the specified pattern is displayed.
FED7:                 571 *
FED7:A0 01            572 SEARCH  LDY  #1          ;set Y to 1
FED9:A5 43            573         LDA  A4H         ;is high byte 0?
FEDB:F0 04    FEE1    574         BEQ  SRCH1       ;=>yes, only look for low byte
FEDD:D1 3C            575         CMP  (A1L),Y     ;check high byte first
FEDF:D0 0A    FEEB    576         BNE  SRCH2       ;=>no match, try next byte
FEE1:88               577 SRCH1   DEY              ;match, now check low byte
FEE2:A5 42            578         LDA  A4L         ;get low byte
FEE4:D1 3C            579         CMP  (A1L),Y     ;does it match?
FEE6:D0 03    FEEB    580         BNE  SRCH2       ;=>no match, try next byte
FEE8:20 92 FD         581         JSR  PRA1        ;bytes match, print address
FEEB:20 BA FC         582 SRCH2   JSR  NXTA1       ;increment address
FEEE:90 E7    FED7    583         BCC  SEARCH      ;set Y back to 1
FEF0:60               584         RTS
FEF1:                 585 *
FEF1:A0 0D            586 MINI    LDY  #$D         ;dispatch mini-assembler call to
FEF3:20 B4 FB         587         JSR  GOTOCX      ;get internal ROM switched in
FEF6:                 588 *
FEF6:20 00 FE         589 CRMON   JSR  BL1          ;HANDLE CR AS BLANK
FEF9:68               590         PLA              ; THEN POP STACK
FEFA:68               591         PLA              ; AND RETURN TO MON
FEFB:D0 6C    FF69    592         BNE  MONZ        ;(ALWAYS)
FEFD:                 593 *
FEFD:8D 07 C0         594 READ    STA  SETINTCXROM ;set internal ROM
FF00:20 D1 C5         595         JSR  XREAD       ;do tape read
FF03:8D 06 C0         596 RD2     STA  SETSLOTCXROM ;restore slot CX
FF06:F0 32    FF3A    597         BEQ  BELL        ;read (write) ok, beep
FF08:D0 23    FF2D    598         BNE  PRERR       ;error, print message
FF0A:                 599 *
FF0A:C1 F0 F0 EC      600 TITLE   ASC  "Apple    //e"
FF13:                 601 *
FF13:                 602 * NNBL gets the next non-blank for the mini-assembler
FF13:                 603 *
FF13:20 FD FC         604 NNBL    JSR  UPMON       ;get char, upshift, INY
FF16:C9 A0            605         CMP  #$A0        ;is it blank?
FF18:F0 F9    FF13    606         BEQ  NNBL        ;yes, keep looking
FF1A:60               607         RTS
FF1B:                 608 *
FF1B:B0 6D    FF8A    609 LOOKASC BCS  DIG         ;it was a digit
FF1D:C9 A0            610         CMP  #$A0        ;check for quote (')
FF1F:D0 28    FF49    611         BNE  RTS6        ;nope, return char
FF21:B9 00 02         612         LDA  $200,Y      ;else get next char
FF24:A2 07            613         LDX  #7          ;for shifting asc into A2L and A2H
FF26:C9 8D            614         CMP  #$8D        ;was it CR?
FF28:F0 7D    FFA7    615         BEQ  GETNUM      ;yes, go handle CR
FF2A:C8               616         INY              ;advance index
FF2B:D0 63    FF90    617         BNE  NXTBIT      ;=>(always) into A2L and A2H
FF2D:                 618 *
FF2D:A9 C5            619 PRERR   LDA  #$C5        ;PRINT 'ERR', THEN FALL INTO
FF2F:20 ED FD         620         JSR  COUT        ; FWEEPER.
FF32:A9 D2            621         LDA  #$D2
FF34:20 ED FD         622         JSR  COUT
```

```
FF37:20 ED FD    623          JSR  COUT
FF3A:            624 *
FF3A:A9 87       625 BELL     LDA  #$87       ;MAKE A JOYFUL NOISE, THEN RETURN.
FF3C:4C ED FD    626          JMP  COUT
FF3F:            627 *
FF3F:A5 48       628 RESTORE  LDA  STATUS     ;RESTORE 6502 REGISTER CONTENTS
FF41:48          629          PHA             ; USED BY DEBUG SOFTWARE
FF42:A5 45       630          LDA  A5H
FF44:A6 46       631 RESTR1   LDX  XREG
FF46:A4 47       632          LDY  YREG
FF48:28          633          PLP
FF49:60          634 RTS6     RTS
FF4A:            635 *
FF4A:85 45       636 SAVE     STA  A5H        ;SAVE 6502 REGISTER CONTENTS
FF4C:86 46       637 SAV1     STX  XREG       ; FOR DEBUG SOFTWARE
FF4E:84 47       638          STY  YREG
FF50:08          639          PHP
FF51:68          640          PLA
FF52:85 48       641          STA  STATUS
FF54:BA          642          TSX
FF55:86 49       643          STX  SPNT
FF57:D8          644          CLD
FF58:60          645          RTS
FF59:            646 *
FF59:20 84 FE    647 OLDRST   JSR  SETNORM    ;SET SCREEN MODE
FF5C:20 2F FB    648          JSR  INIT       ; AND INIT KBD/SCREEN
FF5F:20 93 FE    649          JSR  SETVID     ; AS I/O DEVS.
FF62:20 89 FE    650          JSR  SETKBD
FF65:            651 *
FF65:D8          652 MON      CLD             ;MUST SET HEX MODE!
FF66:20 3A FF    653          JSR  BELL       ;FWEEPER.
FF69:A9 AA       654 MONZ     LDA  #$AA       ;'*' PROMPT FOR MONITOR
FF6B:85 33       655          STA  PROMPT
FF6D:20 67 FD    656          JSR  GETLNZ     ;READ A LINE OF INPUT
FF70:20 C7 FF    657          JSR  ZMODE      ;CLEAR MONITOR MODE, SCAN IDX
FF73:20 A7 FF    658 NXTITM   JSR  GETNUM     ;GET ITEM, NON-HEX
FF76:84 34       659          STY  YSAV       ; CHAR IN A-REG.
FF78:A0 17       660          LDY  #$17       ; X-REG=0 IF NO HEX INPUT
FF7A:88          661 CHRSRCH  DEY
FF7B:30 E8   FF65 662          BMI  MON        ;COMMAND NOT FOUND, BEEP & TRY AGAIN.
FF7D:D9 CC FF    663          CMP  CHRTBL,Y   ;FIND COMMAND CHAR IN TABLE
FF80:D0 F8   FF7A 664          BNE  CHRSRCH    ;NOT THIS TIME
FF82:20 BE FF    665          JSR  TOSUB      ;GOT IT! CALL CORRESPONDING SUBROUTINE
FF85:A4 34       666          LDY  YSAV       ;PROCESS NEXT ENTRY ON HIS LINE
FF87:4C 73 FF    667          JMP  NXTITM
FF8A:            668 *
FF8A:A2 03       669 DIG      LDX  #$03
FF8C:0A          670          ASL  A
FF8D:0A          671          ASL  A          ;GOT HEX DIGIT,
FF8E:0A          672          ASL  A          ; SHIFT INTO A2
FF8F:0A          673          ASL  A
FF90:0A          674 NXTBIT   ASL  A
FF91:26 3E       675          ROL  A2L
FF93:26 3F       676          ROL  A2H
FF95:CA          677          DEX             ;LEAVE X=$FF IF DIG
FF96:10 F8   FF90 678          BPL  NXTBIT
FF98:A5 31       679 NXTBAS   LDA  MODE
FF9A:D0 06   FFA2 680          BNE  NXTBS2     ;IF MODE IS ZERO,
FF9C:B5 3F       681          LDA  A2H,X      ; THEN COPY A2 TO A1 AND A3
FF9E:95 3D       682          STA  A1H,X
FFA0:95 41       683          STA  A3H,X
FFA2:E8          684 NXTBS2   INX
FFA3:F0 F3   FF98 685          BEQ  NXTBAS
FFA5:D0 06   FFAD 686          BNE  NXTCHR
FFA7:            687 *
FFA7:A2 00       688 GETNUM   LDX  #$00        ;CLEAR A2
FFA9:86 3E       689          STX  A2L
FFAB:86 3F       690          STX  A2H
FFAD:20 FD FC    691 NXTCHR   JSR  UPMON       ;get char, upshift, INY
FFB0:EA          692          NOP             ;INY now done in UPMON
FFB1:49 B0       693          EOR  #$B0
FFB3:C9 0A       694          CMP  #$0A
FFB5:90 D3   FF8A 695          BCC  DIG        ;BR IF HEX DIGIT
FFB7:69 88       696          ADC  #$88
FFB9:C9 FA       697          CMP  #$FA
FFBB:4C 1B FF    698          JMP  LOOKASC    ;check for ASCII input
FFBE:            699 *
FFBE:A9 FE       700 TOSUB    LDA  #<GO       ;DISPATCH TO SUBROUTINE, BY
FFC0:48          701          PHA             ; PUSHING THE HI-ORDER SUBR ADDR,
FFC1:B9 E3 FF    702          LDA  SUBTBL,Y   ; THEN THE LO-ORDER SUBR ADDR
FFC4:48          703          PHA             ; ONTO THE STACK,
FFC5:A5 31       704          LDA  MODE       ; (CLEARING THE MODE, SAVE THE OLD
FFC7:A0 00       705 ZMODE    LDY  #$00       ; MODE IN A-REG),
FFC9:84 31       706          STY  MODE
FFCB:60          707          RTS             ; AND 'RTS' TO THE SUBROUTINE!
FFCC:            708 *
FFCC:BC          709 CHRTBL   DFB  $BC        ;^C  (BASIC WARM START)
FFCD:B2          710          DFB  $B2        ;^Y  (USER VECTOR)
FFCE:BE          711          DFB  $BE        ;^E  (OPEN AND DISPLAY REGISTERS)
FFCF:9A          712          DFB  $9A        ;!  (enter mini-assembler)
FFD0:EF          713          DFB  $EF        ;V   (MEMORY VERIFY)
FFD1:C4          714          DFB  $C4        ;^K  (IN#SLOT)
FFD2:EC          715          DFB  $EC        ;S   (search for 2 bytes)
FFD3:A9          716          DFB  $A9        ;^P  (PR#SLOT)
FFD4:BB          717          DFB  $BB        ;^B  (BASIC COLD START)
FFD5:A6          718          DFB  $A6        ;'-' (SUBTRACTION)
FFD6:A4          719          DFB  $A4        ;'+' (ADDITION)
FFD7:06          720          DFB  $06        ;M   (MEMORY MOVE)
FFD8:95          721          DFB  $95        ;'<' (DELIMITER FOR MOVE, VFY)
FFD9:07          722          DFB  $07        ;N   (SET NORMAL VIDEO)
FFDA:02          723          DFB  $02        ;I   (SET INVERSE VIDEO)
FFDB:05          724          DFB  $05        ;L   (DISASSEMBLE 20 INSTRS)
FFDC:F0          725          DFB  $F0        ;W   (WRITE TO TAPE)
FFDD:00          726          DFB  $00        ;G   (EXECUTE PROGRAM)
FFDE:EB          727          DFB  $EB        ;R   (READ FROM TAPE)
FFDF:93          728          DFB  $93        ;':' (MEMORY FILL)
FFE0:A7          729          DFB  $A7        ;'.' (ADDRESS DELIMITER)
FFE1:C6          730          DFB  $C6        ;'CR' (END OF INPUT)
```

```
FFE2:99           731          DFB  $99         ;BLANK
FFE3:             732 *
FFE3:             733 * Table of low order monitor routine dispatch
FFE3:             734 * addresses.  High byte always $FE
FFE3:             735 *
FFE3:B2           736 SUBTBL   DFB  >BASCONT-1 ;^C   (BASIC warm start)
FFE4:C9           737          DFB  >USR-1     ;^Y   (not used)
FFE5:8E           738          DFB  >REGZ-1    ;^E   (open and display registers)
FFE6:F0           739          DFB  >MINI-1    ;mini assembler
FFE7:35           740          DFB  >VFY-1     ;V    (memory verify)
FFE8:8C           741          DFB  >INPRT-1   ;^K   (IN#SLOT)
FFE9:D6           742          DFB  >SEARCH-1  ;search for pattern
FFEA:96           743          DFB  >OUTPRT-1  ;^P   (PR#SLOT)
FFEB:AF           744          DFB  >XBASIC-1  ;^B   (BASIC cold start)
FFEC:17           745          DFB  >SETMODE-1 ;'-'  (subtraction)
FFED:17           746          DFB  >SETMODE-1 ;'+'  (addition)
FFEE:2B           747          DFB  >MOVE-1    ;M    (memory move)
FFEF:1F           748          DFB  >LT-1      ;'<'  (delim for move,vfy)
FFF0:83           749          DFB  >SETNORM-1 ;N    (set normal video)
FFF1:7F           750          DFB  >SETINV-1  ;I    (set inverse video)
FFF2:5D           751          DFB  >LIST-1    ;L    (disassemble 20 instrs)
FFF3:CC           752          DFB  >WRITE-1   ;W    (write to tape)
FFF4:B5           753          DFB  >GO-1      ;G    (execute program)
FFF5:FC           754          DFB  >READ-1    ;R    (read from tape)
FFF6:17           755          DFB  >SETMODE-1 ;':'  (memory fill)
FFF7:17           756          DFB  >SETMODE-1 ;'.'  (address delimiter)
FFF8:F5           757          DFB  >CRMON-1   ;'CR' (end of input)
FFF9:03           758          DFB  >BLANK-1   ;BLANK
FFFA:             759 *
FFFA:FB 03        760          DW   NMI        ;NON-MASKABLE INTERRUPT VECTOR
FFFC:62 FA        761          DW   RESET      ;RESET VECTOR
FFFE:FA C3        762          DW   IRQ        ;INTERRUPT REQUEST VECTOR
0000:              19          INCLUDE MINI
0000:              1 *
0000:              2 * Apple //e Mini Assembler
0000:              3 *
0000:              4 * Got mnemonic, check address mode
0000:              5 *
C4C8:        C4C8  6          ORG  C3ORG+$1C8
C4C8:              7 *
C4C8:20 13 FF      8 AMOD1    JSR  NNBL       ;get next non-blank
C4CB:84 34         9          STY  YSAV       ;save Y
C4CD:DD B4 F9     10          CMP  CHAR1,X
C4D0:D0 13   C4E5 11          BNE  AMOD2
C4D2:20 13 FF     12          JSR  NNBL       ;get next non-blank
C4D5:DD BA F9     13          CMP  CHAR2,X
C4D8:F0 0D   C4E7 14          BEQ  AMOD3
C4DA:BD BA F9     15          LDA  CHAR2,X    ;done yet?
C4DD:F0 07   C4E6 16          BEQ  AMOD4
C4DF:C9 A4        17          CMP  #$A4       ;if "$" then done
C4E1:F0 03   C4E6 18          BEQ  AMOD4
C4E3:A4 34        19          LDY  YSAV       ;restore Y
C4E5:18           20 AMOD2    CLC
C4E6:88           21 AMOD4    DEY

C4E7:26 44        22 AMOD3    ROL  A5L        ;shift bit into format
C4E9:E0 03        23          CPX  #$03
C4EB:D0 0D   C4FA 24          BNE  AMOD6
C4ED:20 A7 FF     25          JSR  GETNUM
C4F0:A5 3F        26          LDA  A2H        ;get high byte of address
C4F2:F0 01   C4F5 27          BEQ  AMOD5      ;=>
C4F4:E8           28          INX
C4F5:86 35        29 AMOD5    STX  YSAV1
C4F7:A2 03        30          LDX  #$03
C4F9:88           31          DEY
C4FA:86 3D        32 AMOD6    STX  A1H
C4FC:CA           33          DEX
C4FD:10 C9   C4C8 34          BPL  AMOD1
C4FF:60           35          RTS
C500:             36 *
CF3A:        CF3A 37          ORG  C8ORG+$73A
CF3A:             38 *
CF3A:             39 * Calculate offset byte for relative addresses
CF3A:             40 *
CF3A:E9 81        41 REL      SBC  #$81       ;calc relative address
CF3C:4A           42          LSR  A
CF3D:D0 14   CF53 43          BNE  GOERR      ;bad branch
CF3F:A4 3F        44          LDY  A2H
CF41:A6 3E        45          LDX  A2L
CF43:D0 01   CF46 46          BNE  REL1
CF45:88           47          DEY             ;point to offset
CF46:CA           48 REL1     DEX              ;displacement - 1
CF47:8A           49          TXA
CF48:18           50          CLC
CF49:E5 3A        51          SBC  PCL        ;subtract current PCL
CF4B:85 3E        52          STA  A2L        ;and save as displacement
CF4D:10 01   CF50 53          BPL  REL2       ;check page
CF4F:C8           54          INY
CF50:98           55 REL2     TYA              ;get page
CF51:E5 3B        56          SBC  PCH        ;check page
CF53:D0 40   CF95 57 GOERR    BNE  MINIERR    ;display error
CF55:             58 *
CF55:             59 * Move instruction to memory
CF55:             60 *
CF55:A4 2F        61 MOVINST  LDY  LENGTH     ;get instruction length
CF57:B9 3D 00     62 MOV1     LDA  A1H,Y      ;get a byte
CF5A:91 3A        63          STA  (PCL),Y    ;and move it
CF5C:88           64          DEY
CF5D:10 F8   CF57 65          BPL  MOV1
CF5F:             66 *
CF5F:             67 * Display instruction
CF5F:             68 *
CF5F:20 48 F9     69          JSR  PRBLNK     ;print blanks to make ProDOS work
CF62:20 1A FC     70          JSR  UP         ;move up 2 lines
CF65:20 1A FC     71          JSR  UP
CF68:4C E3 FC     72          JMP  DISLIN     ;disassemble it, =>DOINST
CF6B:             73 *
CF6B:             74 * Compare disassembly of all known opcodes with
CF6B:             75 * the one typed in until a match is found
```

```
CF6B:                   76 *
CF6B:A5 3D              77 GETOP   LDA  A1H       ;get opcode
CF6D:20 8E F8           78         JSR  INSDS2    ;determine mnemonic index
CF70:AA                 79         TAX            ;X = index
CF71:BD 00 FA           80         LDA  MNEMR,X   ;get right half of index
CF74:C5 42              81         CMP  A4L       ;does it match entry?
CF76:D0 13    CF8B      82         BNE  NXTOP     ;=>try next opcode
CF78:BD C0 F9           83         LDA  MNEML,X   ;get left half of index
CF7B:C5 43              84         CMP  A4H       ;does it match entry?
CF7D:D0 0C    CF8B      85         BNE  NXTOP     ;=>no, try next opcode
CF7F:A5 44              86         LDA  A5L       ;found opcode, check address mode
CF81:A4 2E              87         LDY  FORMAT    ;get addr. mode format for that opcode
CF83:C0 9D              88         CPY  #$9D      ;is it relative?
CF85:F0 B3    CF3A      89         BEQ  REL       ;=>yes, calc relative address
CF87:C5 2E              90         CMP  FORMAT    ;does mode match?
CF89:F0 CA    CF55      91         BEQ  MOVINST   ;=>yes, move instruction to memory
CF8B:C6 3D              92 NXTOP   DEC  A1H       ;else try next opcode
CF8D:D0 DC    CF6B      93         BNE  GETOP     ;=>go try it
CF8F:E6 44              94         INC  A5L       ;else try next format
CF91:C6 35              95         DEC  YSAV1
CF93:F0 D6    CF6B      96         BEQ  GETOP     ;=>go try next format
CF95:                   97 *
CF95:                   98 * Point to the error with a caret, beep, and fall
CF95:                   99 * into the mini-assembler.
CF95:                  100 *
CF95:A4 34             101 MINIERR LDY  YSAV      ;get position
CF97:98                102 ERR2   TYA
CF98:AA                103         TAX
CF99:4C D2 FC          104         JMP  ERR3      ;display error, =>DOINST
CF9C:                  105 *
CF9C:                  106 * Read a line of input.  If prefaced with " ", decode
CF9C:                  107 * mnemonic. If "$" do monitor command.  Otherwise parse
CF9C:                  108 * hex address before decoding mnemonic.
CF9C:                  109 *
CF9C:20 C7 FF          110 DOINST  JSR  ZMODE     ;clear mode
CF9F:AD 00 02          111         LDA  $200      ;get first char in line
CFA2:C9 A0             112         CMP  #$A0      ;if blank,
CFA4:F0 12    CFB8     113         BEQ  DOLIN     ;=>go attempt disassembly
CFA6:C9 8D             114         CMP  #$8D      ;is it return?
CFA8:D0 01    CFAB     115         BNE  GETI1     ;=>no, continue
CFAA:60                116         RTS            ;else return to Monitor
CFAB:                  117 *
CFAB:20 A7 FF          118 GETI1   JSR  GETNUM    ;parse hexadecimal input
CFAE:C9 93             119         CMP  #$93      ;look for "ADDR:"
CFB0:D0 E5    CF97     120 GOERR2  BNE  ERR2      ;no ":", display error
CFB2:8A                121         TXA            ;X nonzero if address entered
CFB3:F0 E2    CF97     122         BEQ  ERR2      ;no "ADDR", display error
CFB5:                  123 *
CFB5:20 78 FE          124         JSR  A1PCLP    ;move address to PC
CFB8:A9 03             125 DOLIN   LDA  #$03      ;get starting opcode
CFBA:85 3D             126         STA  A1H       ;and save
CFBC:20 13 FF          127 NXTCH   JSR  NNBL      ;get next non-blank
CFBF:0A                128         ASL  A         ;validate entry
CFC0:E9 BE             129         SBC  #$BE
CFC2:C9 C2             130         CMP  #$C2
CFC4:90 D1    CF97     131         BCC  ERR2      ;=>flag bad mnemonic
CFC6:                  132 *
CFC6:                  133 * Form mnemonic for later comparison
CFC6:                  134 *
CFC6:0A                135         ASL  A
CFC7:0A                136         ASL  A
CFC8:A2 04             137         LDX  #$04
CFCA:0A                138 NXTMN   ASL  A
CFCB:26 42             139         ROL  A4L
CFCD:26 43             140         ROL  A4H
CFCF:CA                141         DEX
CFD0:10 F8    CFCA     142         BPL  NXTMN
CFD2:C6 3D             143         DEC  A1H       ;decrement mnemonic count
CFD4:F0 F4    CFCA     144         BEQ  NXTMN
CFD6:10 E4    CFBC     145         BPL  NXTCH
CFD8:A2 05             146         LDX  #$5       ;index into address mode tables
CFDA:20 C8 C4          147         JSR  AMOD1     ;do this elsewhere
CFDD:A5 44             148         LDA  A5L       ;get format
CFDF:0A                149         ASL  A
CFE0:0A                150         ASL  A
CFE1:05 35             151         ORA  YSAV1
CFE3:C9 20             152         CMP  #$20
CFE5:B0 06    CFED     153         BCS  AMOD7
CFE7:A6 35             154         LDX  YSAV1     ;get our format
CFE9:F0 02    CFED     155         BEQ  AMOD7
CFEB:09 80             156         ORA  #$80
CFED:85 44             157 AMOD7   STA  A5L       ;update format
CFEF:84 34             158         STY  YSAV      ;update position
CFF1:B9 00 02          159         LDA  $0200,Y   ;get next character
CFF4:C9 BB             160         CMP  #$BB      ;is it a ";"?
CFF6:F0 04    CFFC     161         BEQ  AMOD8     ;=>yes, skip comment
CFF8:C9 8D             162         CMP  #$8D      ;is it carriage return
CFFA:D0 B4    CFB0     163         BNE  GOERR2
CFFC:4C 6B CF          164 AMOD8   JMP  GETOP     ;get next opcode
CFFF:                  165 *
CFFF:00                166         DFB  $00       ;byte for making CTOD checksum ok
```

Downloaded from www.Apple2Online.com

Glossary

accumulator: The register in the 65C02 microprocessor where most computations are performed.

ACIA: Acronym for *Asynchronous Communications Interface Adapter.* A single **chip** that converts data from parallel to serial form and vice versa. An ACIA handles serial transmission and reception and RS-232-C signals under the control of its internal registers, which can be set and changed by firmware or software.

acronym: A word formed from the initial letters of a name or phrase, such as ROM (from *read-only memory*).

address: A number that specifies the location of a single **byte** of memory. Addresses can be given as decimal integers or as hexadecimal integers. A 64K system has addresses ranging from 0 to 65535 (in decimal) or from $0000 to $FFFF (in hexadecimal).

algorithm: A step-by-step procedure for solving a problem or accomplishing a task.

American Simplified Keyboard: See **Dvorak keyboard.**

analog: Varying smoothly and continuously over a range, rather than changing in discrete jumps. For example, a conventional 12-hour clock face is an analog device that shows the time of day by the continuously changing position of the clock's hands. Compare **digital.**

analog data: Data in the form of continuously variable quantities. Compare **digital data.**

analog signal: A signal that varies continuously over time, rather than being sent and received in discrete intervals. Compare **digital signal.**

analog-to-digital converter (ADC): A device that converts quantities from analog to digital form. For example, computer hand controls convert the position of the control dial (an analog quantity) into a discrete number (a digital quantity) that changes stepwise even when the dial is turned smoothly.

AND: A logical operator that produces a true result if both its operands are true, and a false result if either or both of its operands are false. Compare **OR, NOT, exclusive OR.**

ANSI: Acronym for *American National Standards Institute,* which sets standards for many technical fields and is the most common standard for computer terminals.

Apple I: The first Apple computer. It was built in a garage in California by Steve Jobs and Steve Wozniak.

Applesoft BASIC: The Apple II dialect of the BASIC programming language. An interpreter for creating and executing Applesoft BASIC programs is built into the firmware of computers in the Apple II family. See also **BASIC, Integer BASIC.**

Apple III: An Apple computer; part of the Apple II family. The Apple III offered a built-in disk drive and built-in RS-232-C (serial) port. Its memory was expandable to 256K.

Apple II: A family of computers, including the original Apple II, the Apple II Plus, the Apple IIe, the Apple IIc, and the Apple IIGS. The original Apple II used Integer BASIC instead of Applesoft BASIC, and it required a keyboard command (PR#6) in order to start up from a disk.

Apple IIc: A transportable personal computer in the Apple II family, with a disk drive and 80-column display capability built in.

Apple IIe: A personal computer in the Apple II family with seven expansion slots and an auxiliary memory slot that allow the user to enhance the computer's capabilities with peripheral and auxiliary cards. The Apple IIe has been improved and enhanced over the years.

Apple IIe 80-Column Text Card: A peripheral card that plugs into the Apple IIe's auxiliary memory slot and allows the computer to display either 40 or 80 characters per line.

Apple IIe Extended 80-Column Text Card: A peripheral card that plugs into the Apple IIe's auxiliary memory slot and allows the computer to display either 40 or 80 characters per line while extending the computer's memory capacity by 64K.

Apple IIGS: A powerful new member of the Apple II family. The Apple IIGS uses a 16-bit microprocessor and has 256K of RAM. It has slots like the Apple IIe and ports like the Apple IIc, and contains a 15-voice custom sound chip.

Apple II Pascal: A software system for the Apple II family that lets you create and execute programs written in the Pascal programming language. Apple II Pascal was adapted by Apple Computer from the University of California, San Diego, Pascal Operating System (UCSD Pascal).

Apple II Plus: A personal computer in the Apple II family with expansion slots that allow the user to enhance the computer's capabilities with peripheral and auxiliary cards.

application program: A program written for some specific purpose, such as word processing data base management, graphics, or telecommunication. Compare **system program.**

argument: A value on which a function or statement operates; it can be a number or a variable. For example, in the BASIC statement `VTAB 10`, the number 10 is the argument. Compare **operand.**

arithmetic expression: A combination of numbers and arithmetic operators (such as 3 + 5) that indicates some operation to be carried out.

arithmetic operator: An operator, such as +, that combines numeric values to produce a numeric result. Compare **logical operator, relational operator.**

ASCII: Acronym for *American Standard Code for Information Interchange;* pronounced "ASK-ee." A code in which the numbers from 0 to 127 stand for text characters. ASCII code is used for representing text inside a computer and for transmitting text between computers or between a computer and a peripheral device. Compare **EBCDIC.**

assembler: A language translator that converts a program written in assembly language into an equivalent program in machine language. The opposite of a **disassembler.**

assembly language: A low-level programming language in which individual machine-language instructions are written in a symbolic form that's easier to understand than machine language itself. Each assembly-language instruction produces one machine-language instruction. See also **machine language.**

asynchronous: Not synchronized by a mutual timing signal or clock. Compare **synchronous.**

asynchronous transmission: A method of data transmission in which the receiving and sending devices don't share a common timer, and no timing data is transmitted. Each information character is individually synchronized, usually by the use of start and stop bits. The time interval between characters isn't necessarily fixed. Compare **synchronous transmission.**

auxiliary slot: The special expansion slot inside the Apple IIe used for the Apple IIe 80-Column Text Card or Extended 80-Column Text Card, and also for the RGB monitor card. The slot is labeled "AUX. CONNECTOR" on the circuit board.

base address: In *indexed addressing,* the fixed component of an address.

BASIC: Acronym for *Beginners All-purpose Symbolic Instruction Code.* BASIC is a high-level programming language designed to be easy to learn. Two versions of BASIC are available from Apple Computer for use with all Apple II–family systems: Applesoft BASIC (built into the firmware) and Integer BASIC.

baud: A unit of data transmission speed: the number of discrete signal state changes per second. Often, but not always, equivalent to *bits per second.* Compare **bit rate.**

binary: Characterized by having two different components, or by having only two alternatives or values available; sometimes used synonymously with **binary system.**

binary digit: The smallest unit of information in the binary number system; a 0 or a 1. Also called a **bit.**

binary operator: An operator that combines two operands to produce a result. For example, + is a binary arithmetic operator; < is a binary relational operator; OR is a binary logical operator. Compare **unary operator.**

binary system: The representation of numbers in the base-2 system, using only the two digits 0 and 1. For example, the numbers 0, 1, 2, 3, and 4 become 0, 1, 10, 11, and 100 in binary notation. The binary system is commonly used in computers because the values 0 and 1 can easily be represented in a variety of ways, such as the presence or absence of current, positive or negative voltage, or a white or black dot on the display screen. A single binary digit—a 0 or a 1—is called a **bit.** Compare **decimal, hexadecimal.**

bit: A contraction of *binary digit.* The smallest unit of information that a computer can hold. The value of a bit (1 or 0) represents a simple two-way choice, such as yes or no, on or off, positive or negative, something or nothing. See also **binary system.**

bit rate: The speed at which bits are transmitted, usually expressed as *bits per second,* or *bps.* Compare **baud.**

bits per second: See **bit rate.**

board: See **printed-circuit board.**

body: In BASIC, the statements or instructions that make up a part of a program, such as a loop or a subroutine.

boot: Another way to say **start up.** A computer boots by loading a program into memory from an external storage medium such as a disk. Starting up is often accomplished by first loading a small program, which then reads a larger program into memory. The program is said to "pull itself up by its own bootstraps"—hence the term *bootstrapping* or *booting.*

boot disk: See **startup disk.**

bootstrap: See **boot.**

bps: See **bit rate.**

branch: (v) To pass program control to a line or statement other than the next in sequence. (n) A statement that performs a branch. See **conditional branch, unconditional branch.**

BREAK: A SPACE (0) signal, sent over a communication line, of long enough duration to interrupt the sender. This signal is often used to end a session with a time-sharing service. BREAK is also used in BASIC to stop execution of a program. It's generated by pressing Control-C.

BRK: A "software interrupt." An instruction that causes the 6502 or 65C02 microprocessor to halt. Pronounced "break."

buffer: A "holding area" of the computer's memory where information can be stored by one program or device and then read at a different rate by another; for example, a print buffer. In editing functions, an area in memory where deleted (cut) or copied data is held. In some applications, this area is called the *Clipboard.*

bug: An error in a program that causes it not to work as intended. The expression reportedly comes from the early days of computing when an itinerant moth shorted a connection and caused a breakdown in a room-size computer.

bus: A group of wires or circuits that transmit related information from one part of a computer system to another. In a network, a line of cable with connectors linking devices together. A bus network has a beginning and an end. (It's not in a closed circle or T shape.)

byte: A unit of information consisting of a fixed number of **bits.** On Apple II systems, one byte consists of a series of eight bits, and a byte can represent any value between 0 and 255. The sequence represents an instruction, letter, number, punctuation mark, or other character. See also **kilobyte, megabyte.**

cable: An insulated bundle of wires with connectors on the ends; the number of wires varies with the type of connection. Examples are serial cables, disk drive cables, and AppleTalk cables.

call: (v) To request the execution of a subroutine, function, or procedure. (n) A request from the keyboard or from a procedure to execute a named procedure. See **procedure.**

carriage return: An ASCII character (decimal 13) that ordinarily causes a printer or display device to place the next character on the left margin.

carrier: The background signal on a communication channel that is modified to carry information. Under RS-232-C rules, the carrier signal is equivalent to a continuous MARK (1) signal; a transition to 0 then represents a start bit.

carry flag: A status bit in the 6502 or 65C02 microprocessor, used as a ninth bit with the eight accumulator bits in addition, subtraction, rotation, and shift operations.

central processing unit (CPU): The "brain" of the computer; the microprocessor that performs the actual computations in machine language. See **microprocessor.**

character: Any symbol that has a widely understood meaning and thus can convey information. Some characters—such as letters, numbers, and punctuation—can be displayed on the monitor screen and printed on a printer. Compare **control character.**

character code: A number used to represent a character for processing by a computer system.

character set: The entire set of characters that can be either shown on a monitor or used to code computer instructions. In a printer, the entire set of characters that the printer is capable of printing.

Clear To Send: An RS-232-C signal from a DCE to a DTE that is normally kept false until the DCE makes it true, indicating that all circuits are ready to transfer data out. See **Data Communication Equipment, Data Terminal Equipment.**

code: (1) A number or symbol used to represent some piece of information. (2) The statements or instructions that make up a program.

cold start: The process of starting up the Apple II when the power is first turned on (or as if the power had just been turned on) by loading the operating system into main memory, and then loading and running a program. Compare **warm start.**

column: A vertical arrangement of graphics points or character positions on the display.

command: An instruction that causes the computer to perform some action. A command can be typed from a keyboard, selected from a menu with a hand-held device (such as a mouse), or embedded in a program.

compiler: A language translator that converts a program written in a high-level programming language (source code) into an equivalent program in some lower-level language such as machine language (object code) for later execution. Compare **interpreter.**

composite video: A video signal that includes both display information and the synchronization (and other) signals needed to display it. See **RGB monitor.**

computer: An electronic device that performs predefined (programmed) computations at high speed and with great accuracy. A machine that is used to store, transfer, and transform information.

computer language: See **programming language.**

conditional branch: A **branch** whose execution depends on the truth of a condition or the value of an expression. Compare **unconditional branch.**

configuration: (1) The total combination of hardware components—CPU, video display device, keyboard, and peripheral devices—that make up a computer system. (2) The software settings that allow various hardware components of a computer system to communicate with each other.

connector: A plug, socket, jack, or port.

constant: In a program, a symbol that represents a fixed, unchanging value. Compare **variable.**

control character: A nonprinting character that controls or modifies the way information is printed or displayed. In the Apple II family, control characters have ASCII values between 0 and 31, and are typed from a keyboard by holding down the Control key while pressing some other key. In the Macintosh family, the Command key performs a similar function.

control code: One or more nonprinting characters—included in a text file—whose function is to change the way a printer prints the text. For example, a program may use certain control codes to turn boldface printing on and off. See **control character.**

control key: A general term for a key that controls the operation of other keys; for example, Apple, Caps Lock, Control, Option, and Shift. When you hold down or engage a control key while pressing another key, the combination makes that other key behave differently. Also called a *modifier key.*

Control key: A specific key on Apple II–family keyboards that produces **control characters** when used in combination with other keys.

controller card: A peripheral card that connects a device such as a printer or disk drive to a computer's main logic board and controls the operation of the device.

Control-Reset: A combination keystroke on Apple II–family computers that usually causes an Applesoft BASIC program or command to stop immediately. If a program disables the Control-Reset feature, you need to turn the computer off to get the program to stop.

copy protect: To make a disk uncopyable. Software publishers frequently try to copy protect their disks to prevent them from being illegally duplicated by software pirates. Compare **write protect.**

CPU: See **central processing unit.**

crash: To cease to operate unexpectedly, possibly destroying information in the process.

current input device: The source, such as the keyboard or a modem, from which a program is currently receiving its input.

current output device: The destination, such as the display screen or a printer, currently receiving a program's output.

cursor: A symbol displayed on the screen marking where the user's next action will take effect or where the next character typed from the keyboard will appear.

DAC: See **digital-to-analog converter.**

data: Information, especially information used or operated on by a program. The smallest unit of information a computer can understand is a **bit.**

data bits: The bits in a communication transfer that contain information. Compare **start bit, stop bit.**

Data Carrier Detect (DCD): An RS-232-C signal from a DCE (such as a modem) to a DTE (such as an Apple IIe) indicating that a communication connection has been established. See **Data Communication Equipment, Data Terminal Equipment.**

Data Communication Equipment (DCE): As defined by the RS-232-C standard, any device that transmits or receives information. Usually this device is a modem.

data set: A device that modulates, demodulates, and controls signals transferred between business machines and communication facilities. A form of **modem.**

Data Set Ready (DSR): An RS-232-C signal from a DCE to a DTE indicating that the DCE has established a connection. See **Data Communication Equipment, Data Terminal Equipment.**

Data Terminal Equipment (DTE): As defined by the RS-232-C standard, any device that generates or absorbs information, thus acting as an endpoint of a communication connection. A computer might serve as a DTE.

Data Terminal Ready (DTR): An RS-232-C signal from a DTE to a DCE indicating a readiness to transmit or receive data. See **Data Communication Equipment, Data Terminal Equipment.**

DCD: See **Data Carrier Detect.**

DCE: See **Data Communication Equipment.**

debug: A colloquial term that means to locate and correct an error or the cause of a problem or malfunction in a computer program. Compare **troubleshoot.** See also **bug.**

decimal: The common form of number representation used in everyday life, in which numbers are expressed in in the base-10 system, using the ten digits 0 through 9. Compare **binary, hexadecimal.**

default: A preset response to a question or prompt. The default is automatically used by the computer if you don't supply a different response. Default values prevent a program from stalling or crashing if no value is supplied by the user.

deferred execution: The execution of a BASIC program instruction that is part of a complete program. The program instruction is executed only when the complete program is run. You defer execution of the instruction by preceding it with a program line number. The complete program executes consecutive instructions in numerical order. Compare **immediate execution.**

Delete key: A key on the upper-right corner of the Apple IIe and IIc keyboards that erases the character immediately preceding (to the left of) the cursor. Similar to the Macintosh Backspace key.

delimiter: A character that is used for punctuation to mark the beginning or end of a sequence of characters, and which therefore is not considered part of the sequence itself. For example, Applesoft BASIC uses the double quotation mark (") as a delimiter for string constants: the string "DOG" consists of the three characters *D, O,* and *G,* and does not include the quotation marks.

demodulate: To recover the information being transmitted by a modulated signal. For example, a conventional radio receiver demodulates an incoming broadcast signal to convert it into the sound emitted by the radio's speaker. Compare **modulate.**

device: Frequently used as a short form of **peripheral device.**

device driver: A program that manages the transfer of information between the computer and a peripheral device.

device handler: See **device driver.**

digit: (1) One of the characters 0 through 9, used to express numbers in decimal form. (2) One of the characters used to express numbers in some other form, such as 0 and 1 in binary or 0 through 9 and A through F in hexadecimal.

digital: Represented in a discrete (noncontinuous) form, such as numerical digits or integers. For example, contemporary digital clocks show the time as a digital display (such as 2:57) instead of using the positions of a pair of hands on a clock face. Compare **analog.**

digital data: Data that can be represented by digits—that is, data that are discrete rather than continuously variable. Compare **analog data.**

digital signal: A signal that is sent and received in discrete intervals. A signal that does not vary continuously over time. Compare **analog signal.**

digital-to-analog converter: A device that converts quantities from digital to analog form.

DIP: See **dual in-line package.**

DIP switches: A bank of tiny switches, each of which can be moved manually one way or the other to represent one of two values (usually on and off). See **dual in-line package.**

disassembler: A language translator that converts a machine-language program into an equivalent program in assembly language, which is easier for programmers to understand. The opposite of an **assembler.**

disk: An information-storage medium consisting of a flat, circular, magnetic surface on which information can be recorded in the form of small magnetized spots, in a manner similar to the way sounds are recorded on tape. See **floppy disk, hard disk.**

disk-based: See **disk-resident.**

disk controller card: A peripheral card that provides the connection between one or two disk drives and the computer. This connection, or interface, is built into both the Apple IIc and Macintosh-family computers.

disk drive: The device that holds a disk, retrieves information from it, and saves information to it.

disk envelope: A removable, protective paper sleeve used when handling or storing a 5.25-inch disk. It must be removed before you insert the disk in a disk drive. Compare **disk jacket.**

disk jacket: A permanent, protective covering for a disk. 5.25-inch disks have flexible, paper or plastic jackets; 3.5-inch disks have hard plastic jackets. The disk is never removed from the jacket. Compare **disk envelope.**

Disk Operating System (DOS): An optional software system for the Apple II family of computers that enables the computer to control and communicate with one or more disk drives. The acronym *DOS* rhymes with *boss.*

disk-resident: An adjective describing a program that does not remain in memory. The computer retrieves all or part of the program from the disk, as needed. Sometimes called *disk-based.* Compare **memory-resident.**

Disk II drive: An older type of disk drive made and sold by Apple Computer for use with the Apple II, II Plus, and IIe. It uses 5.25-inch disks.

display: (1) A general term to describe what you see on the screen of your display device when you're using a computer; from the verb form, which means "to place into view." (2) Short for a display device.

display color: The color currently being used to draw high-resolution or low-resolution graphics on the display screen.

display device: A device that displays information, such as a television set or video monitor.

display screen: The screen of the monitor; the area where you view text and pictures when using the computer.

DOS 3.2: An early Apple II operating system. DOS stands for **Disk Operating System;** 3.2 is the version number. Disks formatted using DOS 3.2 have 13 sectors per track.

DOS 3.3: An operating system used by the Apple II family of computers. DOS stands for **Disk Operating System;** 3.3 is the version number. Disks formatted with DOS 3.3 have 16 sectors per track.

drive: See **disk drive.**

DSR: See **Data Set Ready.**

DTE: See **Data Terminal Equipment.**

DTR: See **Data Terminal Ready.**

dual in-line package (DIP): An integrated circuit packaged in a narrow rectangular box with a row of metal pins along each side. **DIP switches** on the box allow you to change settings. For example, ImageWriter printer DIP switches control functions such as **line feed, form length,** and **baud** setting.

Dvorak keyboard: An alternate keyboard layout, also known as the *American Simplified Keyboard,* which increases typing speed because the keys most often used are in the positions easiest to reach. Compare **QWERTY keyboard.**

EBCDIC: Acronym for *Extended Binary-Coded Decimal Interchange Code;* pronounced "EB-si-dik." A code used by IBM that represents each letter, number, special character, and control character as an 8-bit binary number. EBCDIC has a character set of 256 8-bit characters. Compare **ASCII.**

effective address: In machine-language programming, the address of the memory location on which a particular instruction operates, which may be arrived at by indexed addressing or some other addressing method.

80-column text card: A peripheral card that allows the Apple II, Apple II Plus, and Apple IIe to display text in either 40 columns or 80 columns.

80/40-column switch: A switch that controls the maximum number of columns or characters across the screen. A television can legibly display a maximum of 40 characters across the screen, whereas a video monitor can display 80 characters.

embedded: Contained within. For example, the string `'HUMPTY DUMPTY'` is said to contain an embedded space.

emulate: To operate in a way identical to a different system. For example, the Apple II 2780/3780 Protocol Emulator and the Apple II 3270 BSC Protocol Emulator, together with the Apple Communications Protocol Card (ACPC), allow the Apple II, Apple II Plus, or Apple IIe to emulate the operations of IBM 3278 and 3277 terminals and 3274 and 3271 control units.

end-of-command mark: A punctuation mark used to separate commands sent to a peripheral device such as a printer or plotter. Also called a *command terminator.*

end-of-line character: A character that indicates that the preceding text constitutes a full line.

error code: A number or other symbol representing a type of error.

error message: A message displayed or printed to tell you of an error or problem in the execution of a program or in your communication with the system. An error message is often accompanied by a beep.

ESCAPE character: An ASCII character that, with many programs and devices, allows you to perform special functions when used in combination keypresses.

escape code: A sequence of characters that begins with an ESCAPE character and constitutes a complete command. Usually synonymous with **escape sequence.**

Escape key: A key on Apple II–family computers that generates the ESCAPE character. The Escape key is labeled *Esc.* In many applications, pressing Escape allows you to return to a previous **menu** or to stop a procedure.

escape mode: A state of the Apple IIe and IIc entered by pressing the Escape key and certain other keys. The other keys take on special meanings for positioning the cursor and controlling the display of text on the screen.

escape sequence: A sequence of keystrokes, beginning with the Escape key. In **escape mode,** escape sequences are used for positioning the cursor and controlling the display of text on the screen. Escape sequences are also used as codes to control printers.

Esc key: See **Escape key.**

even/odd parity check: In data transmission, a check that tests whether the number of 1 bits in a group of binary digits is even (even parity check) or odd (odd parity check).

even parity: In data transmission, the use of an extra bit set to 0 or 1 as necessary to make the total number of 1 bits an even number; used as a means of error checking. Compare **MARK parity, odd parity.**

exclusive OR: A logical operator that produces a true result if one of its operands is true and the other false, and a false result if its operands are both true or both false. Compare **OR, AND,** and **NOT.**

execute: To perform the actions specified by a program command or sequence of commands.

expansion slot: A connector into which you can install a peripheral card. Sometimes called a *peripheral slot.* See also **auxiliary slot.**

expression: A formula in a program that defines a calculation to be performed.

FIFO: Acronym for "first in, first out" order, as in a **queue.**

file: Any named, ordered collection of information stored on a disk. Application programs and operating systems on disks are files. You make a file when you create text or graphics, give the material a name, and save it to disk.

firmware: Programs stored permanently in read-only memory (ROM). Such programs (for example, the Applesoft Interpreter and the Monitor program) are built into the computer at the factory. They can be executed at any time but cannot be modified or erased from main memory. Compare **hardware, software.**

fixed-point: A method of representing numbers inside the computer in which the decimal point (more correctly, the binary point) is considered to occur at a fixed position within the number. Typically, the point is considered to lie at the right end of the number so that the number is interpreted as an **integer.** Compare **floating-point.**

flag: A variable whose value (usually 1 or 0, standing for *true* or *false*) indicates whether some condition holds or whether some event has occurred. A flag is used to control the program's actions at some later time.

floating-point: A method of representing numbers inside the computer in which the decimal point (more correctly, the binary point) is permitted to "float" to different positions within the number. Some of the bits within the number itself are used to keep track of the point's position. Compare **fixed-point.**

floppy disk: A **disk** made of flexible plastic, as compared to a **hard disk,** which is made of metal. The term *floppy* is now usually applied only to disks with thin, flexible **disk jackets,** such as 5.25-inch disks. With 3.5-inch disks, the disk itself is flexible, but the jacket is made of hard plastic; thus, 3.5-inch disks aren't particularly "floppy."

format: (n) (1) The form in which information is organized or presented. (2) The general shape and appearance of a printed page, including page size, character width and spacing, line spacing, and so on. (v) To divide a disk into tracks and sectors where information can be stored. Blank disks must be formatted before you can save information on them for the first time; same as **initialize.**

form feed: An ASCII character (decimal 12) that causes a printer or other paper-handling device to advance to the top of the next page.

Fortran: Short for *Formula Translator.* A high-level programming language especially suitable for applications requiring extensive numerical calculations, such as in mathematics, engineering, and the sciences.

framing error: In serial data transfer, the absence of the expected stop bit(s) at the end of a received character.

frequency: In alternating current (AC) signals, the number of complete cycles transmitted per second. Frequency is usually expressed in hertz (cycles per second), kilohertz (kilocycles per second), or megahertz (megacycles per second). In acoustics, frequency of vibration determines musical pitch.

full duplex: A four-wire communication circuit or protocol that allows two-way data transmission between two points at the same time. Compare **half duplex.**

function: A preprogrammed calculation that can be carried out on request from any point in a program. A function takes in one or more arguments and returns a single value. It can therefore be embedded in an expression.

game I/O connector: A 16-pin connector inside the Apple II, II Plus, and IIe, originally designed for connecting hand controls to the computer, but also used for connecting some other peripheral devices. Compare **hand control connector.**

graph: A pictorial representation of data.

graphics: (1) Information presented in the form of pictures or images. (2) The display of pictures or images on a computer's display screen. Compare **text.**

half duplex: A two-wire communication circuit or protocol designed for data transmission in either direction but not both directions simultaneously. Compare **full duplex.**

hand control connector: A 9-pin connector on the back panel of the Apple IIe and IIc computers, used for connecting hand controls to the computer. Compare **game I/O connector.**

hand controls: Peripheral devices, with rotating dials and push buttons. Hand controls are used to control game-playing programs, but they can also be used in other applications.

hang: To cease operation because either an expected condition is not satisfied or an infinite loop is occurring. A computer that's hanging is called a *hung system.* Compare **crash.**

hard disk: A disk made of metal and sealed into a drive or cartridge. A hard disk can store very large amounts of information compared to a **floppy disk.**

hard disk drive: A device that holds a hard disk, retrieves information from it, and saves information to it. Hard disks made for microprocessors are permanently sealed into the drives.

hardware: In computer terminology, the machinery that makes up a computer system. Compare **firmware, software.**

hertz: The unit of frequency of vibration or oscillation, defined as the number of *cycles per second.* Named for the physicist Heinrich Hertz and abbreviated *Hz.* The 6502 microprocessor used in the Apple II systems operates at a clock frequency of about 1 million hertz, or 1 megahertz (MHz). The 68000 microprocessor used in the Macintosh operates at 7.8336 MHz.

hexadecimal: The representation of numbers in the base-16 system, using the ten digits 0 through 9 and the six letters A through F. For example, the decimal numbers 0, 1, 2, 3, 4, ... 8, 9, 10, 11, ... 15, 16, 17 would be shown in hexadecimal notation as 00, 01, 02, 03, 04, ... 08, 09, 0A, 0B, ... 0F, 10, 11. Hexadecimal numbers are easier for people to read and understand than are binary numbers, and they can be converted easily and directly to binary form. Each hexadecimal digit corresponds to a sequence of four **binary digits,** or bits. Hexadecimal numbers are usually preceded by a dollar sign ($).

high ASCII characters: ASCII characters with decimal values of 128 to 255. Called *high ASCII* because their high bit (first binary digit) is set to 1 (for *on*) rather than 0 (for *off*).

high-level language: A programming language that is relatively easy for people to understand. A single statement in a high-level language typically corresponds to several instructions of machine language. High-level languages available from Apple Computer include BASIC, Pascal, Instant Pascal, Logo, Pilot, SuperPILOT, and Fortran. Compare **low-level language.**

high-order byte: The more significant half of a memory address or other two-byte quantity. In the 6502 microprocessor used in the Apple II family of computers, the **low-order byte** of an address is usually stored first, and the high-order byte second. In the 68000 microprocessors used in the Macintosh family, the high-order byte is stored first.

high-resolution graphics: The display of graphics on a screen as a six-color array of points, 280 columns wide and 192 rows high. When a text window is in use, the visible high-resolution graphics display is 280 by 160 points.

hold time: In computer circuits, the amount of time a signal must remain valid after some related signal has been turned off. Compare **setup time.**

Hz: See **hertz.**

IC: See **integrated circuit.**

immediate execution: The execution of a program statement as soon as it is typed. In BASIC, immediate execution occurs when the line is typed without a line number; immediate execution allows you to try out nearly every statement immediately to see how it works. Compare **deferred execution.**

implement: To put into practical effect, as to *implement* a plan. For example, a language translator implements a particular language.

IN#: This command designates the source of subsequent input characters. It can be used to designate a device in a slot or a machine-language routine as the source of input.

index: (1) A number used to identify a member of a list or table by its sequential position. (2) A list or table whose entries are identified by sequential position. (3) In machine-language programming, the variable component of an indexed address, contained in an index register and added to the base address to form the effective address.

indexed addressing: A method used in machine-language programming to specify memory addresses. See also **memory location.**

index register: A register in a computer processor that holds an index for use in indexed addressing. The 6502 microprocessor used in the Apple II family of computers has two index registers, called the **X register** and the **Y register.** The 68000 microprocessor used in Macintosh-family computers has 16 registers that can be used as index registers.

index variable: A variable whose value changes on each pass through a loop. Often called control variable or *loop variable.*

infinite loop: A section of a program that will repeat the same sequence of actions indefinitely.

initialize: (1) To set to an initial state or value in preparation for some computation. (2) To prepare a blank disk to receive information by organizing its surface into tracks and sectors; same as **format.**

initialized disk: A disk that has been organized into tracks and sectors by the computer and is therefore ready to store information.

input: Information transferred into a computer from some external source, such as the keyboard, a disk drive, or a modem.

input/output (I/O): The process by which information is transferred between the computer's memory and its keyboard or peripheral devices.

input routine: A machine-language routine; the standard input routine reads characters from the keyboard. A different input routine might, for example, read them from an external terminal.

instruction: A unit of a machine-language or assembly-language program corresponding to a single action for the computer's processor to perform.

integer: A whole number in fixed-point form. Compare **real number.**

Integer BASIC: A version of the BASIC programming language used by the Apple II family of computers. Integer BASIC is older than Applesoft BASIC and is capable of processing numbers in integer (fixed-point) form only. Many games are written in Integer BASIC because its instructions can be executed very quickly. Compare **Applesoft BASIC.**

integrated circuit: An electronic circuit—including components and interconnections—entirely contained in a single piece of semiconducting material, usually silicon. Often referred to as an *IC* or a *chip.*

interface: (1) The point at which independent systems or diverse groups interact. The devices, rules, or conventions by which one component of a system communicates with another. Also, the point of communication between a person and a computer. (2) The part of a program that defines constants, variables, and data structures, rather than procedures.

interface card: A peripheral card that implements a particular interface (such as a parallel or serial interface) by which the computer can communicate with a peripheral device such as a printer or modem.

interpreter: A language translator that reads a program instruction by instruction and immediately translates each instruction for the computer to carry out. Compare **compiler.**

interrupt: A temporary suspension in the execution of a program that allows the computer to perform some other task, typically in response to a signal from a peripheral device or other source external to the computer.

inverse video: The display of text on the computer's display screen in the form of dark dots on a light (or other single phosphor color) background, instead of the usual light dots on a dark background.

I/O: See **input/output.**

I/O device: Input/output device. A device that transfers information into or out of a computer. See **input, output, peripheral device.**

I/O link: A fixed location that contains the address of an input/output subroutine in the computer's Monitor program.

IWM: "Integrated Woz Machine"; the custom chip that controls Apple's 3.5-inch disk drives.

joystick: A peripheral device with a lever, typically used to move creatures and objects in game programs; a joystick can also used in applications such as computer-aided design and graphics programs.

K: See **kilobyte.**

keyboard: The set of keys, similar to a typewriter keyboard, used for entering information into the computer.

keyboard input connector: The connector inside the Apple II family of computers by which the keyboard is connected to the computer.

keyword: A special word or sequence of characters that identifies a particular type of statement or command, such as *RUN, BRUN,* or *PRINT.*

kilobyte (K): A unit of measurement consisting of 1024 (2^{10}) **bytes.** In this usage, *kilo* (from the Greek, meaning a thousand) stands for 1024. Thus, 64K memory equals 65,536 bytes. See also **megabyte.**

KSW: The symbolic name of the location in the computer's memory where the standard input link (namely, to the keyboard) is stored. KSW stands for *keyboard switch.*

language: See **programming language.**

language card: A peripheral card that, when placed in slot 0 of a 48K Apple II or Apple II Plus, gives the computer a total of 64K of memory. If you have an Apple II or Apple II Plus, you need a language card or the equivalent to use ProDOS.

language translator: A system program that reads another program written in a particular programming language and either executes it directly or converts it into some other language (such as machine language) for later execution. See **interpreter, compiler, assembler.**

leading zero: A zero occurring at the beginning of a decimal number, deleted by most computing programs.

least significant bit: The rightmost bit of a binary number. The least significant bit contributes the smallest quantity to the value of the number. Compare **most significant bit.**

LIFO: Acronym for "first in, last out" order, as in a **stack.**

line: See **program line.**

line feed: An ASCII character (decimal 10) that ordinarily causes a printer or video display to advance to the next line.

line number: A number identifying a program line in an Applesoft BASIC program.

line width: The number of characters that fit on a line on the screen or on a page.

list: To display on a monitor, or print on a printer, the contents of memory or of a file.

load: To transfer information from a peripheral storage medium (such as a disk) into main memory for use—for example, to transfer a program into memory for execution.

location: See **memory location.**

logic: (1) In microcomputers, a mathematical treatment of formal logic using a set of symbols to represent quantities and relationships that can be translated into switching circuits, or *gates*. AND, OR, and NOT are examples of logical gates. Each gate has two states, open or closed, allowing the application of **binary** numbers for solving problems. (2) The systematic scheme that defines the interactions of signals in the design of an automatic data processing system.

logical operator: An operator, such as AND, that combines logical values to produce a logical result, such as true or false; sometimes called a *Boolean operator*. Compare **arithmetic operator, relational operator.**

logic board: See **main logic board.**

loop: A section of a program that is executed repeatedly until a limit or condition is met, such as an index variable's reaching a specified ending value.

loop variable: See **index variable.**

low-level language: A programming language that is relatively close to the form the computer's processor can execute directly. One statement in a low-level language corresponds to a single machine-language instruction. Examples are 6502 machine language, 6502 assembly language, and 68000 machine and assembly languages. Compare **high-level language.**

low-order byte: The less significant half of a memory address or other two-byte quantity. In the 6502 microprocessor used in the Apple II family of computers, the low-order byte of an address is usually stored first, and the **high-order byte** second. The opposite is true for Macintosh computers.

low-power Schottky (LS): A type of **transistor-transistor logic (TTL)** integrated circuit having lower power and higher speed than a conventional TTL integrated circuit; named for Walter Schottky (1886–1956), a semiconductor physicist.

low-resolution graphics: The display of graphics on a display screen as a 16-color array of blocks, 40 columns wide and 48 rows high. For example, on a Macintosh when the text window is in use, the visible low-resolution graphics display is 40 by 40 plotting points—that is, 40 by 40 **pixels.** See **high-resolution graphics.**

LS: See **low-power Schottky.**

machine language: The form in which instructions to a computer are stored in memory for direct execution by the computer's processor. Each model of computer processor (such as the 6502 microprocessor used in the Apple II family of computers) has its own form of machine language.

mainframe computer: A central processing unit or computer that is larger and more powerful than a minicomputer or a personal computer (microcomputer). Frequently called simply a *mainframe* for short. The Apple Access II program and MacTerminal make it possible to communicate with mainframe computers over telecommunications media.

main logic board: A large circuit board that holds RAM, ROM, the microprocessor, custom-integrated circuits, and other components that make the computer a computer.

main memory: The part of a computer's memory whose contents are directly accessible to the microprocessor; usually synonymous with **random-access memory (RAM).** Programs are loaded into main memory, and that's where the computer keeps information while you're working. Sometimes simply called *memory.* See also **read-only memory, read-write memory.**

MARK parity: A bit of value 1 appended to a binary number for transmission. The receiving device checks for errors by looking for this value on each character. Compare **even parity, odd parity.**

megabyte: A unit of measurement equal to 1024 kilobytes, or 1,048,576 bytes; abbreviated Mb. See **kilobyte.**

memory: A hardware component of a computer system that can store information for later retrieval. See **main memory, random-access memory, read-only memory, read-write memory.**

memory location: A unit of main memory that is identified by an address and can hold a single item of information of a fixed size. In the Apple II family of computers, a memory location holds one byte, or eight bits, of information.

memory-resident: (1) Stored permanently in memory as firmware (ROM). (2) Held continually in memory even while not in use. DOS is a memory-resident program.

menu: A list of choices presented by a program, from which you can select an action.

MHz: Megahertz; one million hertz. See **hertz.**

microcomputer: A computer, such as any of the Apple II or Macintosh computers, whose processor is a **microprocessor.**

microprocessor: A computer **processor** contained in a single integrated circuit, such as the 6502 or 65C02 microprocessor used in the Apple II family of computers and the 68000 microprocessor used in the Macintosh family. The microprocessor is the **central processing unit (CPU)** of the microcomputer.

microsecond: One millionth of a second. Abbreviated μs.

millisecond: One thousandth of a second. Abbreviated ms.

mode: A state of a computer or system that determines its behavior. A manner of operating.

modem: Short for *MOdulator/DEModulator.* A peripheral device that links your computer to other computers and information services using the telephone lines.

modifier key: A key (Apple, Caps Lock, Control, Option, Shift) that generates no keyboard events of its own, but changes the meaning of other keys or mouse actions. Also called a *control key.*

modulate: To modify or alter a signal so as to transmit information. For example, conventional broadcast radio transmits sound by modulating the amplitude (amplitude modulation, or AM) or the frequency (frequency modulation, or FM) of a carrier signal.

monitor: See **video monitor.**

Monitor program: A system program built into the firmware of some computers, used for directly inspecting or changing the contents of main memory and for operating the computer at the machine-language level. The Monitor program activates the disk drive when you turn on the computer.

most significant bit: The leftmost bit of a binary number. The most significant bit contributes the largest quantity to the value of the number. For example, in the binary number 10110 (decimal value 22), the leftmost bit has the decimal value 16 (2^4). Compare **least significant bit.**

mouse: A small device you move around on a flat surface next to your computer. The mouse controls a pointer on the screen whose movements correspond to those of the mouse. You use the pointer to select menu items, to move data, and to draw with in graphics programs.

mouse button: The button on the top of the mouse. In general, pressing the mouse button initiates some action on whatever is under the pointer, and releasing the button confirms the action.

nanosecond: One billionth of a second. Abbreviated ns.

nested loop: A loop contained within the body of another loop and executed repeatedly during each pass through the outer loop. See **loop.**

nested subroutine call: A call to a subroutine from within the body of another subroutine.

nibble: A unit of data equal to half a byte, or four bits. A nibble can hold any value from 0 to 15.

NOT: A unary logical operator that produces a true result if its operand is false, and a false result if its operand is true. Compare **AND, OR, exclusive OR.**

NTSC: (1) Abbreviation for *National Television Standards Committee.* The committee that defined the standard format used for transmitting broadcast video signals in the United States. (2) The standard video format defined by the NTSC.

object code: See **object program.**

object program: The translated form of a program produced by a language translator such as a compiler or assembler. Also called *object code.* Compare **source program.**

odd parity: In data transmission, the use of an extra bit set to 0 or 1 as necessary to make the total number of 1 bits an odd number; used as a means of error checking. Compare **even parity, MARK parity.**

opcode: See **operation code.**

Open Apple: A **control key** on the Apple II–family keyboards; on later keyboards, simply called the *Apple key.*

operand: A value to which an operator is applied. The value on which an operation code operates. Compare **argument.**

operating system: A program that organizes the actions of the parts of the computer and its peripheral devices.

operation code: The part of a machine-language instruction that specifies the operation to be performed. Often called *opcode.*

operator: A symbol or sequence of characters, such as + or AND, specifying an operation to be performed on one or more values (the operands) to produce a result. See **arithmetic operator, relational operator, logical operator, unary operator, binary operator.**

option: (1) Something chosen or available as a choice; for instance, items in a menu. (2) An **argument** whose provision is optional.

OR: A logical operator that produces a true result if either or both of its operands are true, and a false result if both of its operands are false. Compare **exclusive OR, AND, NOT.**

output: Information transferred from a computer to some external destination, such as the display screen, a disk drive, a printer, or a modem.

output routine: A machine-language routine that performs the sending of characters. The standard output routine sends characters to the screen. A different output routine might, for example, send them to a printer.

overflow: The condition that exists when an attempt is made to put more data into a given memory area than it can hold; for example, a computational result that exceeds the allowed range.

override: To modify or cancel an instruction by issuing another one.

overrun: A condition that occurs when the processor does not retrieve a received character from the receive data register of the Asynchronous Communications Interface Adapter (ACIA) before the subsequent character arrives. The ACIA automatically sets bit 2 (OVR) of its status register; subsequent characters are lost. The receive data register contains the last valid data word received.

page: (1) A screenful of information on a video display. In the Apple II family of computers, a page consists of 24 lines of 40 or 80 characters each. (2) An area of main memory containing text or graphical information being displayed on the screen. (3) A segment of main memory 256 bytes long and beginning at an address that is an even multiple of 256.

page zero: See **zero page.**

parallel interface: An **interface** in which several bits of information (typically eight bits, or one byte) are transmitted simultaneously over different wires or channels. Compare **serial interface.**

parity: Sameness of level or count, usually the count of 1 bits in each character, used for error checking in data transmission. See **even parity, MARK parity, odd parity, parity bit.**

Pascal: A high-level programming language with statements that resemble English phrases. Pascal was designed to teach programming as a systematic approach to problem solving. Named after the philosopher and mathematician Blaise Pascal.

pass: A single execution of a loop.

PC board: See **printed-circuit board.**

peek: To read information directly from a location in the computer's memory.

peripheral: (adj) At or outside the boundaries of the computer itself, either physically (as a peripheral device) or in a logical sense (as a peripheral card). (n) Short for *peripheral device.*

peripheral bus: The **bus** used for transmitting information between the computer and peripheral devices connected to the computer's expansion slots or ports.

peripheral card: A removable printed-circuit board that plugs into one of the computer's expansion slots. Peripheral cards allow the computer to use peripheral devices or to perform some subsidiary or peripheral function.

peripheral device: A piece of hardware—such as a video monitor, disk drive, printer, or modem—used in conjunction with a computer and under the computer's control. Peripheral devices are often (but not necessarily) physically separate from the computer and connected to it by wires, cables, or some other form of interface. They often require **peripheral cards.**

peripheral slot: See **expansion slot.**

phase: (1) A stage in a periodic process. A point in a cycle. For example, the 6502 microprocessor uses a clock cycle consisting of two phases called Φ 0 and Φ 1. (2) The relationship between two periodic signals or processes.

PILOT: Acronym for *Programmed Inquiry, Learning, Or Teaching.* A high-level programming language designed for teachers and used to create computer-aided instruction (CAI) lessons that include color graphics, sound effects, lesson text, and answer checking. SuperPILOT is an enhanced version of the original Apple II PILOT programming language.

pipelining: A feature of a processor that enables it to begin fetching the next instruction before it has finished executing the current instruction. All else being equal, processors with this feature run faster than those without it.

pixel: Short for *picture element.* A point on the graphics screen; the visual representation of a bit on the screen (white if the bit is 0, black if it's 1). Also, a location in video memory that maps to a point on the graphics screen when the viewing window includes that location.

plotting vector: A code representing a single step in drawing a shape on the high-resolution graphics screen. The plotting vector specifies whether to plot a point at the current screen position, and in what direction to move (up, down, left, or right) before processing the next vector.

pointer: An item of information consisting of the memory address of some other item. For example, Applesoft BASIC maintains internal pointers to the most recently stored variable, the most recently typed program line, and the most recently read data item, among other things. The 6502 uses one of its internal registers as a pointer to the top of the stack.

point of call: The point in a program from which a subroutine or function is called.

poke: To store information directly into a location in the computer's memory.

pop: To remove the top entry from a **stack,** moving the stack pointer to the entry below it. Synonymous with *pull.* Compare **push.**

power supply: A circuit that draws electrical power from a power outlet and converts it to the kind of power the computer can use.

power supply case: The metal case inside most Apple II and Macintosh computers that houses the power supply. The Apple IIc uses an external power supply case.

PR#: An Applesoft BASIC command that sends output to a slot or a machine-language program. It specifies an output routine in the ROM on a peripheral card or in a machine-language routine in RAM by changing the address of the standard output routine used by the computer.

precedence: The order in which operators are applied in evaluating an expression. Precedence varies from language to language, but usually resembles the precedence rules of algebra.

printed-circuit board: A hardware component of a computer or other electronic device, consisting of a flat, rectangular piece of rigid material, commonly Fiberglas, to which integrated circuits and other electronic components are connected.

procedure: In the Pascal and Logo programming languages, a set of instructions that work as a unit; approximately equivalent to the term **subroutine** in BASIC.

processor: The hardware component of a computer that performs the actual computation by directly executing instructions represented in machine language and stored in main memory. See **microprocessor.**

ProDOS: An Apple II operating system designed to support hard disk drives like the ProFile, as well as floppy disk storage devices. ProDOS stands for *Professional Disk Operating System.* Compare **DOS.**

ProDOS command: Any one of the 28 commands recognized by ProDOS.

program: (n) A set of instructions describing actions for a computer to perform in order to accomplish some task, conforming to the rules and conventions of a particular programming language. (v) To write a program.

program line: The basic unit of an Applesoft BASIC program, consisting of one or more statements separated by colons (:).

programming language: A set of symbols and associated rules or conventions for writing programs. BASIC, Logo, and Pascal are programming languages.

prompt: A message on the screen that tells you of some need for response or action. A prompt usually takes the form of a symbol, a message, a dialog box, or a menu of choices.

prompt character: A text character displayed on the screen, usually just to the left of a **cursor,** where your next action is expected. The prompt character often identifies the program or component of the system that's prompting you. For example, Applesoft BASIC uses a square bracket prompt character (]); Integer BASIC, an angle bracket (>); and the System Monitor program, an asterisk (*).

prompt line: A specific area on the display reserved for prompts.

protocol: A formal set of rules for sending and receiving data on a communication line.

push: To add an entry to the top of a **stack,** moving the stack pointer to point to it. Compare **pop.**

queue: A list in which entries are added at one end and removed at the other, causing entries to be removed in first-in, first-out (FIFO) order. Compare **stack.**

QWERTY keyboard: The standard layout of keys on a typewriter keyboard; its name is formed from the first six letters on the top row of letter keys. Compare **Dvorak keyboard.**

radio-frequency (RF) modulator: A device that makes your television set work as a monitor.

RAM: See **random-access memory.**

random-access memory (RAM): Memory in which information can be referred to in an arbitrary or random order. As an analogy, a book is a random-access storage device in that it can be opened and read at any point. RAM usually means the part of memory available for programs from a disk; the programs and other data are lost when the computer is turned off. A computer with 512K RAM has 512 kilobytes available to the user. (Technically, the read-only memory (ROM) is also *random access,* and what's called RAM should correctly be termed *read-write memory.*) Compare **read-only memory, read-write memory.**

random-access text file: A text file that is partitioned into an unlimited number of uniform-length compartments called *records.* When you open a random-access text file for the first time, you must specify its record length. No record is placed in the file until written to. Each record can be individually read from or written to—hence, *random-access.*

raster: The pattern of parallel lines making up the image on a video display screen. The image is produced by controlling the brightness of successive points on the individual lines of the raster.

read: To transfer information into the computer's memory from outside the computer (such as a disk drive or modem) or into the computer's processor from a source external to the processor (such as the keyboard or main memory).

read-only memory (ROM): Memory whose contents can be read, but not changed; used for storing **firmware.** Information is placed into read-only memory once, during manufacture; it then remains there permanently, even when the computer's power is turned off. Compare **random-access memory, read-write memory.**

read-write memory: Memory whose contents can be both read and changed (or *written to*). The information contained in read-write memory is erased when the computer's power is turned off and is permanently lost unless it has been saved on a disk or other storage device. Compare **random-access memory, read-only memory.**

real number: In computer usage, a number that may include a fractional part; represented inside the computer in **floating-point** form. Because a real number is of infinite precision, this representation is usually approximate. Compare **integer.**

register: A location in a processor or other chip where an item of information is held and modified under program control.

relational operator: An operator, such as >, that operates on numeric values to produce a logical result. Compare **arithmetic operator, logical operator.**

reserved word: A word or sequence of characters reserved by a programming language for some special use and therefore unavailable as a variable name in a program.

resident: See **memory-resident, disk-resident.**

return address: The point in a program to which control returns on completion of a subroutine or function.

RF modulator: See **radio-frequency modulator.**

RGB monitor: A type of color monitor that receives separate signals for each color (red, green, and blue). See **composite video.**

ROM: See **read-only memory.**

routine: A part of a program that accomplishes some task subordinate to the overall task of the program.

row: A horizontal arrangement of character cells or graphics **pixels** on the screen.

RS-232 cable: Any cable that is wired in accordance with the RS-232 standard, which is the common serial data communication interface standard.

run: (1) To execute a program. When a program *runs,* the computer performs the instructions. (2) To load a program into main memory from a peripheral storage medium, such as a disk, and execute it.

save: To store information by transferring the information from main memory to a disk. Work not saved disappears when you turn off the computer or when the power is interrupted.

screen: See **display screen.**

scroll: To move all the text on the screen upward or downward, and, in some cases, sideways. See **viewport, window.**

serial interface: An interface in which information is transmitted sequentially, a bit at a time, over a single wire or channel. Compare **parallel interface.**

setup time: The amount of time a signal must be valid in advance of some event. Compare **hold time.**

silicon (Si): A solid, crystalline chemical element from which integrated circuits are made. Silicon is a *semiconductor;* that is, it conducts electricity better than insulators, but not as well as metallic conductors. Silicon should not be confused with silica—that is, silicon dioxide, such as quartz, opal, or sand—or with silicone, any of a group of organic compounds containing silicon.

simple variable: A variable that is not an element of an array.

6502: The microprocessor used in the Apple II, in the Apple II Plus, and in early models of the Apple IIe.

65C02: The microprocessor used in the enhanced Apple IIe, the extended keyboard IIe, and the Apple IIc.

68000: The microprocessor used in the Macintosh and Macintosh Plus.

slot: A narrow socket inside the computer where you can install peripheral cards. Also called an **expansion slot.**

soft switch: Also called a *software switch;* a means of changing some feature of the computer from within a program. For example, **DIP switch** settings on ImageWriter printers can be overridden with soft switches. Specifically, a soft switch is a location in memory that produces some special effect whenever its contents are read or written.

software: A collective term for **programs,** the instructions that tell the computer what to do. They're usually stored on disks. Compare **hardware, firmware.**

source code: See **source program.**

source program: The form of a program given to a language translator, such as a compiler or assembler, for conversion into another form; sometimes called *source code.* Compare **object program.**

space character: A text character whose printed representation is a blank space, typed from the keyboard by pressing the Space bar.

stack: A list in which entries are added (pushed) or removed (popped) at one end only (the top of the stack), causing them to be removed in last-in, first-out (LIFO) order. Compare **queue.**

standard instruction: An instruction automatically present when no superseding instruction has been received.

starting value: The value assigned to the index variable on the first pass through a loop.

start up: To get the system running. Starting up is the process of first reading the operating system program from the disk, and then running an application program.

startup disk: A disk with all the necessary program files—such as the Finder and System files contained in the System folder in Macintosh—to set the computer into operation. In Apple II, sometimes called a *boot disk.*

statement: A unit of a program in a high-level language that specifies an action for the computer to perform. A statement typically corresponds to several instructions of machine language.

step value: The amount by which the index variable changes on each pass through a loop.

string: An item of information consisting of a sequence of text characters.

strobe: A signal whose change is used to trigger some action.

subroutine: A part of a program that can be executed on request from another point in the program and that returns control, on completion, to the point of the request.

synchronous: A mode of data transmission in which a constant time interval exists between transmission of successive bits, characters, or events. Compare **asynchronous.**

synchronous transmission: A transmission process that uses a clocking signal to ensure an integral number of unit (time) intervals between any two characters. Compare **asynchronous transmission.**

syntax: (1) The rules governing the structure of statements or instructions in a programming language. (2) A representation of a command that specifies all the possible forms the command can take.

system: A coordinated collection of interrelated and interacting parts organized to perform some function or achieve some purpose—for example, a computer system comprising a processor, keyboard, monitor, and disk drive.

system configuration: See **configuration.**

system program: A program that makes the resources and capabilities of the computer available for general purposes, such as an operating system or a language translator. Compare **application program.**

system software: The component of a computer system that supports application programs by managing system resources such as memory and I/O devices.

TAB: An ASCII character that commands a device such as a printer to start printing at a preset location (called a *tab stop*). There are two such characters: horizontal tab (hex 09) and vertical tab (hex 0B). TAB works like the tabs on a typewriter.

television set: A display device capable of receiving broadcast video signals (such as commercial television broadcasts) by means of an antenna. Can be used in combination with a radio-frequency modulator as a display device for the Apple II family of computers. Compare **video monitor.**

text: (1) Information presented in the form of readable characters. (2) The display of characters on a display screen. Compare **graphics.**

text window: An area on the video display screen within which text is displayed and scrolled.

traces: Electrical paths that connect the components on a circuit board.

transistor-transistor logic (TTL): (1) A family of integrated circuits having bipolar circuit logic; TTLs are used in computers and related devices. (2) A standard for interconnecting such circuits, which defines the voltages used to represent logical zeros and ones.

troubleshoot: To locate and correct the cause of a problem or malfunction, especially in hardware. Compare **debug.**

TTL: See **transistor-transistor logic.**

turnkey disk: See **startup disk.**

unary operator: An operator that applies to a single operand. For example, the minus sign (–) in a negative number such as –6 is a unary arithmetic operator. Compare **binary operator.**

unconditional branch: A branch that does not depend on the truth of any condition. Compare **conditional branch.**

value: An item of information that can be stored in a variable, such as a number or a string.

variable: (1) A location in the computer's memory where a value can be stored. (2) The symbol used in a program to represent such a location. Compare **constant.**

vector: (1) The starting address of a program segment, when used as a common point for transferring control from other programs. (2) A memory location used to hold a vector, or the address of such a location.

video: (1) A medium for transmitting information in the form of images to be displayed on the screen of a cathode-ray tube. (2) Information organized or transmitted in video form.

video monitor: A display device that can receive video signals by direct connection only, and that cannot receive broadcast signals such as commercial television. Can be connected directly to the computer as a display device. Compare **television set.**

viewport: All or part of the display screen used by an application program to display a portion of the information (such as a document, picture, or worksheet) on which a program is working. Compare **window.**

volume: A general term referring to a storage device; a source of or a destination for information. A volume has a name and a volume directory with the same name. Its information is organized into files.

warm start: The process of transferring control back to the operating system in response to a failure in an application program. Compare **cold start.**

window: The portion of a collection of information (such as a document, picture, or worksheet) that is visible in a viewport on the display screen. Compare **viewport.**

word: A group of bits that is treated as a unit; the number of bits in a word is a characteristic of each particular computer.

write: To transfer information from the computer to a destination external to the computer (such as a disk drive, printer, or modem) or from the computer's processor to a destination external to the processor (such as main memory).

write-enable notch: The square cutout on one edge of a 5.25-inch disk's jacket. If there is no write-enable notch, or if it is covered with a write-protect tab, the disk drive can read information from the disk, but cannot write on it.

write protect: To protect the information on a 5.25-inch disk by covering the write-enable notch with a write-protect tab, preventing the disk drive from writing any new information onto the disk. Compare **copy protect.**

write-protect tab: (1) A small adhesive sticker used to write protect a 5.25-inch disk by covering the write-enable notch. (2) The small plastic tab in the corner of a 3.5-inch disk jacket. You lock (write protect) the disk by sliding the tab toward the edge of the disk; you unlock the disk by sliding the tab back so that it covers the rectangular hole.

X register: One of the two index registers in the 6502 microprocessor.

Y register: One of the two index registers in the 6502 microprocessor.

zero page: The first page (256 bytes) of memory in the Apple II family of computers, also called *page zero.* Since the high-order byte of any address in this page is zero, only the low-order byte is needed to specify a zero-page address; this makes zero-page locations more efficient to address, in both time and space, than locations in any other page of memory.

Bibliography

Addendum to the Design Guidelines. Cupertino, Calif.: Apple Computer, Inc., 1984.

Applesoft BASIC Programmer's Reference Manual, Volumes 1 and 2. For the Apple II, IIe, and IIc. Reading, Mass.: Addison-Wesley, 1982, 1985. ISBN 0-201-17722-6.

Applesoft Tutorial. Reading, Mass.: Addison-Wesley, 1983, 1985. ISBN 0-201-17724-2.

Apple II Monitors Peeled. Cupertino, Calif.: Apple Computer, Inc., 1978. Currently not updated for Apple IIe and IIc, but a good introduction to Apple II series input/output procedures; also useful for historical background.

Apple IIe Design Guidelines. Cupertino, Calif.: Apple Computer, Inc., 1982.

"Characteristics of Television Systems." *C.C.I.R. Report,* Rep. 624 (1970–1974), pp. 22–52.

"Colorimetric Standards in Colour Television." *C.C.I.R. Report,* Rep. 476-1 (1970–1974), pp. 21–22.

Leventhal, Lance. *6502 Assembly Language Programming.* Berkeley, Calif.: Osborne/McGraw-Hill, 1979.

Sims, H. V. *Principles of PAL Colour Television and Related Systems.* London, England: Newnes-Butterworth, 1969. ISBN-0-592-05970-7.

Synertek Hardware manual. Santa Clara, Calif.: Synertek Incorporated, 1976. Does not contain instructions new to 65C02, but is the only currently available manufacturer's hardware manual for 6500-series microcomputers.

Synertek Programming manual. Santa Clara, Calif.: Synertek Incorporated, 1976. The only currently available manufacturer's programming manual for 6500-series microcomputers.

"Video-Frequency Characteristics of a Television System to Be Used for the International Exchange of Programmes Between Countries That Have Adopted 625-Line Colour or Monochrome Systems." *C.C.I.R.,* Recommendation 472-1 (1970–1971), pp. 53–54.

Watson, Allen, III. "A Simplified Theory of Video Graphics, Part I." *Byte,* Vol. 5, No. 11 (November, 1980).

___. "A Simplified Theory of Video Graphics, Part II." *Byte,* Vol. 5, No. 12 (December, 1980).

___. "More Colors for Your Apple." *Byte,* Vol. 4, No. 6 (June, 1979).

___. "True Sixteen-Color Hi-Res." *Apple Orchard,* Vol. 5, No. 1 (January, 1984).

Wozniak, Steve. "System Description: The Apple II." *Byte,* Vol. 2, No. 5 (May, 1977).

___. "SWEET16: The 6502 Dream Machine." *Byte,* Vol. 2, No. 10 (October, 1977).

Index

Cast of Characters

* (asterisk) as prompt character 62
^ (caret) 122, 125
: (colon) as Monitor command 105
> (greater than sign) as prompt character 62
Ó (Open Apple) 11–14, 228
. (period) as Monitor command 102
ø0 (phi 0) 162–163, 167, 170–172, 180–181
ø1 (phi 1) 162–163, 167, 170–172, 180–181
ø2 (phi 2) 162
? (question mark) as prompt character 62
] (right bracket) as prompt character 62
 (Solid Apple) 11–14, 228

A

A1 92
A2 92
A4 92
accumulator 138, 148
ACIA 286
address bus 161–162
addressing
  display pages 31–37, 174–179
  indirect 77
  I/O locations 138–139
  RAM 139, 169–171
  relative 121, 126, 137
  ROM 168–169
address transformation 177
ALTCHAR soft switch 29
alternate character set 19–20, 228
  on original IIe 20
ALTZP soft switch 84, 89–90
analog inputs 42–43
animation 231
annunciators 40–41, 43
any-key-down flag 13
Apple keys 11–14
  differences in Apple II family 228
Applesoft BASIC xxi, 12, 105, 235
  and lowercase xxii
  and uppercase 48–49
  80-column support xxi
  tabbing with original Apple IIe 271–272
  use of page 3 78
  use of page zero 77, 79–81
Apple II compatibility with Apple IIe 48–50
Apple II family differences 227–232
Apple IIc interrupt differences 156
Apple IIe, differences between original and enhanced xix–xxiii
  ASCII input mode 107
  COUT1 subroutine 56
  interrupt support 132, 148–149
  microprocessor 6
  Mini-Assembler 123–125
  Monitor Search command 110
  MouseText 12, 20
  slot 3 144
  tabbing in Applesoft 271–272
  using Caps Lock 49
Apple IIe 80-Column Text Card 86, 134, 267–275
Apple IIe Extended 80-Column Text Card 86, 134, 267–275
A register 146
arithmetic, hexadecimal 116
arrow keys 61, 63–64
ASCII codes 14–16
ASCII input mode 106–107
assemblers 121
assembly language 234
asterisk (*) as prompt character 62
auxiliary firmware 86–93
auxiliary memory 86–93
  differences in Apple II family 229
  map 87
  moving data to 92
  soft switches 89
  subroutines 91
auxiliary RAM 86–88
auxiliary slot 7, 49
  differences in Apple II family 229
  signals 197–200
AUXMOVE subroutine 91–92

B

backspacing 63
bank-switched memory 82–86, 87, 229
  map 82
bank switches 83–85
  reading 86
BASIC, Applesoft *See* Applesoft BASIC
BASIC, Integer *See* Integer BASIC
BASICIN subroutine 58, 220
  address in I/O link 53
BASIC Monitor command 115
BASICOUT subroutine 65, 220
  address in I/O link 53
baud rate for SSC 279
BEL character 53
BELL subroutine 221
BELL1 subroutine 39, 221

bit definition 236
bit mapping of graphics 23–26
booting 267–268
break instructions 155
BRK handler 155
BRK instruction 155
BRK vector 148
BS character 53
byte definition 237

C

canceling lines 63
CAN character 54
Caps Lock 11
  for older software compatibility 49
caret (^) 122, 125
carriage returns with SSC 281
cassette I/O 39–40, 188
  commands 111–114
  soft switches 39
central processing unit (CPU) 4–6
  See also 65C02 microprocessor
CH 52
changing memory contents 105–110
character code 12
character generator ROM 178
character sets, text 19–20
  differences among Apple II models 228
CHARGEN signal 185
circuit board 4–7
  connectors 7
clear-strobe switch 12
CLEOLZ subroutine 50, 69, 219
clock rate 161
clock signals 162
CLREOL subroutine 50, 64, 221
CLREOP subroutine 50, 64, 221
CLRSCR subroutine 64, 221
CLRTOP subroutine 64, 221
cold-start reset 95
colon (:) as Monitor command 105
color graphics with black-and-white monitors 16
colors
  double-high-resolution graphics 25–26, 185
  high-resolution graphics 23–25, 183–184
  low-resolution graphics 21–22, 182
command characters, Monitor 101
comma tabbing with original Apple IIe 271
complementary decimal values 12
connectors
  back panel 8
  cassette I/O 8, 39
  D-type 8, 40
  game I/O 7, 13
  hand control 8, 40–43
  9-pin 8, 40
  phone jacks 8, 39
  power 160
  RCA-type jack 8
  video monitor 8, 186
Control 11
control characters 244, 248
  with BASICOUT 53–55
  with COUT1 53–55
  with 80-column firmware 273–274
  with Pascal I/O protocol 70–71
Control-B Monitor command 115
Control-C Monitor command 115
Control-E Monitor command 111
Control-K Monitor command 115
Control-P Monitor command 115
Control-U 50
Control-X 63
Control-Y Monitor command 119
COUT subroutine 50–52, 64, 221
  deactivating 80-column firmware 50
COUT1 subroutine 51–53, 64, 136, 222
  address in I/O link 51
  on original Apple IIe 56
cover 2
CP/M 234
  starting up with 268
CPU 4–6
  See also 65C02 microprocessor
CR character 53
CROUT subroutine 64, 222
CROUT1 subroutine 64, 222
CSW link 140–141
current, supply 159–160
cursor-control keys 11
cursor motion in escape mode 60–61
cursor position 52–58
custom IC's 164–168
CV 52
cycle stealing 170

D

daisy chains, interrupt and DMA 193–195, 208
data bus 161
data format for SSC 279
DC1 character 54
DC2 character 54
DC3 character 54
decimal values 12
  converting to hexadecimal 238–239
  negative 239–240
device assignment, peripheral card 145
device identification 145
DEVICE SELECT′ signal 133
DHIRES soft switch 30
Diagnostics ROM 168
differences among Apple II models 227–232
differences between original and enhanced Apple IIe xix–xxii
  ASCII input mode 106–107
  COUT1 subroutine 56
  interrupt support 132, 148–149
  microprocessor 6
  Mini-Assembler 123
  Monitor Search command 110
  MouseText 17, 20
  slot 3 144
  tabbing in Applesoft 269
  using Caps Lock 49
disassemblers 121

display, video 16–37
address transformation 175–176
double-high-resolution graphics 184–185
80-column text 179
formats 18, 57
40-column text 179
generation 173–185, 231
high-resolution graphics 183–184
low-resolution graphics 181–182
memory addressing 174–178
modes 17, 19–26, 28–31, 178–185
pages 23, 25, 27–28, 31–37, 78–79
refreshing 170–171
specifications 17
text 178–181
DMA daisy chain 193–195, 208
DOS 3.3 xx, 140, 233
and uppercase 48–49
starting up with 268
use of page 3 78
use of page zero 81
double-high-resolution graphics 17, 18, 25–26
colors 26
display pages 27
generation 184–185
map 37
memory pages 25
double-high-resolution Page 1 79
D-type connector 8

E

editing with GETLN 63–64
80COL soft switch 29
80-column firmware xxi, 49–50
activating 50
control characters with 272–275
80-column text 21, 22
differences in Apple II family 228
display pages 27–28
generation 178–179
map 34
signals 197–198
with Applesoft xxi
with Pascal xxi
with TV set 16
80-Column Text Card 86, 134, 150, 267–275
80STORE soft switch 29, 32, 87, 89, 90, 198
EM character 55
EN80′ signal 198
enhanced Apple IIe *See* differences between original and enhanced Apple IIe
ENKBD′ signal 187
entry points for I/O routines 145–146
escape codes 60–61
escape mode 60–61
ESC character 55
ETB character 54
EXAMINE command 110–111
examining memory 102
expansion ROM space 133–135
expansion slot 3 49–50
expansion slots 7, 132–144
signals 191–197
Extended 80-Column Text Card 86, 134, 267–275
extended keyboard Apple IIe xxiii

F

FF character 54
firmware
auxiliary 86–93
80-column xxi, 49–50
I/O 46–71
Monitor subroutines 46–71
Pascal 1.1 protocol 68–71, 145–146
slot 3 69
flag, any-key-down 13
FLASH command 270–271
flashing format 19–20, 57–58
forced cold-start reset 96
Fortran 235
40-column text 21, 22
display pages 27–28
generation 178–179
memory map 33, 177
with TV set 16
14M signal 163
FS character 55

G

game I/O
connectors 13
signals 190–191
GET command 269
GETLN subroutine 58, 62–64, 222
editing with 63–64
input buffer 78
line length 3
used by Monitor 101
with 80-column card 269
GETLN1 subroutine 222
GETLNZ subroutine 222
GO command 120
graphics *See* double-high-resolution graphics; high-resolution graphics; low-resolution graphics
graphics modes 21–26
bit-mapping 23–26
greater than sign (>) as prompt character 62
GS character 55

H

hand control connectors 8, 40–43
hard disk with Pascal xxii
hexadecimal arithmetic 116
hexadecimal values 12
converting to decimal 238–239
converting to negative decimal 239–240
high-resolution graphics 17, 18, 23–25
addressing display pages 31, 36
bit patterns 241–242
colors 24–25, 183–184
display pages 23, 27
generation 183–184
map 36
high-resolution Page 1 23, 27, 79
high-resolution Page 2 23, 79
HIRES soft switch 29, 30, 89
HLINE subroutine 67, 222
HOME command 270–271
HOME subroutine 50, 67, 223
HTAB command xxi
with original Apple IIe 271–272
humidity, operating 158

I, J

identification byte xx, 231
IN# command 115
index register 138
indirect addressing 77
input buffer 78
INPUT command 269
input devices *See* I/O devices
input/output *See* I/O
Input/Output Unit (IOU) 5, 6, 166–167, 186–187
inputs
  analog 38, 42–43
  hand control 38
  secondary 38–43
  switch 41–42, 43
  See also I/O devices
Integer BASIC 12, 235
  and bank-switched memory 82
  and reset 83
  and uppercase 49
  use of page 3 78
  use of page zero 77, 79–81
interpreter ROM 5
interrupt handler
  built-in 147, 151
  user's 154–155
interrupts 147–156
  and card in auxiliary slot 50
  daisy chain 193, 204
  definition 147
  original Apple IIe differences 148
  priority 147
  sequence 152
interrupt vector 151
INT IN pin 147
INT OUT pin 147
INVERSE command 270–271
inverse display format 19–20, 57–58, 114
I/O
  addressing 138–139
  circuits 186–191
  devices, built-in 9–43
  entry points 145–146
  firmware, built-in 45–71
  links 51, 78, 140–141
  memory for peripheral cards 133
  memory map 142
  Pascal protocol 68–76, 144, 145–146
  switching memory 142–143
IOREST subroutine 223
IOSAVE subroutine 223
I/O SELECT′ signal 133–134
IOU (Input/Output Unit) 5, 6, 166–167, 186–187
IOUDIS soft switch 30
IRQ vector 147–148
IRQ′ signal 148

K

KBD′ signal 187
keyboard 3, 10–16
  automatic repeat function 10
  circuits 187–188
  differences in Apple II family 227
  memory locations 12
  rollover 10
KEYBOARD command 115
keyboard encoder 5, 12
keyboard ROM 5
keyboard strobe 13
KEYIN subroutine 58, 59–60, 223
  address in I/O link 51
keypad 188
keys and ASCII codes 14–16
KSW link 140

L

language card 86
  differences in Apple II family 229
LED 2
Left Arrow 63
LF character 53, 54
line feeds with SSC 281
links, I/O 51
  address storage 78
  changing 140–141
LIST command 121–122
low-resolution graphics 17, 18, 21–23
  colors 23
  display pages 27
  generation 181–182
  map 35
  with TV set 16

M

machine language 120–122
mapping display addresses 175–177
maps *See* memory maps
memory
  addressing 168
  auxiliary 86–93
  bank-switched 82–86, 87, 229
  changing contents 105–110
  display 174–178
  dump 102–104
  examining 102
  filling 117–118
  for peripheral cards 132–136
  I/O space 142–143
  organization 74–98
  sharing 91
  text window locations 56–57
  used by SSC 287
Memory Management Unit (MMU) 5, 6, 164–165

memory maps
auxiliary memory 87
bank-switched areas 82
double-high-resolution graphics 37
80-column text 34
40-column text 33, 177
high-resolution graphics 36
I/O 142
low-resolution graphics 35
main memory 75
RAM 76
memory pages, reserved 77–81
microprocessor *See* 6502 microprocessor; 65C02 microprocessor
Mini-Assembler 123–126
errors 125
instruction formats 126
starting 123
MIXED soft switch 29
MMU 5, 6, 164–165
Monitor, System 100–129
command summary 127–129
command syntax 101
creating commands 119
firmware subroutines 46–71
returning to BASIC 115
ROM listings 307–347
use of page 3 8
use of page zero 79
Monitor ROM 168–169
listings 307–347
MouseText characters 17, 19, 246
MOVE command 107–108, 117
MOVE subroutine 223
MSLOT 150, 154

N

NAK character 54
negative decimal values 12
converting 239–240
NEXTCOL subroutine 223
9-pin connectors 8, 40
NORMAL command 270–271
normal format 19–20, 114
NTSC standard 16, 25, 173

O

Open Apple (Ó) 11, 13, 228
operating systems 233–234
original Apple IIe *See* differences between original and enhanced Apple IIe
output *See* I/O
overheating 158

P

Page 1
double-high-resolution 79
high-resolution 23, 27, 79
text 27, 78
Page 2
high-resolution 23, 79
text 27, 79
page 3 vectors 97
page zero 77, 79–81
PAGE2 soft switch 29, 32, 87, 89, 90
pages, reserved memory 77–81
PAL device 5, 167–168
parity for SSC 279
Pascal xx, 235, 275
and bank-switched memory 82
I/O subroutines 46
starting up with 267–268
Pascal 1.1 firmware protocol 68–71, 144, 145–146
Pascal operating system 234
period (.) as Monitor command 102
peripheral address bus 192, 194
peripheral cards
device assignment 145
I/O memory space 133, 141
programming for 132–156
RAM space 136
ROM space 133–135
peripheral data bus 192
differences in Apple II family 231
peripheral slots *See* expansion slots
ø0 (phi 0) 162, 170, 171, 180–181
ø1 (phi 1) 162, 170, 171, 180–181
ø2 (phi 2) 162
phone jacks 8, 39
PINIT subroutine 69
pipelining 161
PLOT subroutine 67, 223
POKE command 271–272
power connector 160
power supply 4, 159–160
PR# command 115
PRBL2 subroutine 67, 224
PRBLNK subroutine 224
PRBYTE subroutine 67, 224
PREAD subroutine 43, 69, 224
PRERR subroutine 67, 224
PRHEX subroutine 68, 224
primary character set 19–20, 228
PRINTER command 115
PRNTAX subroutine 68, 224
ProDOS 105, 141, 233
interrupt support 148–149
starting up with 268
use of page 3 78
use of page zero 81
ProFile hard disk xxii
Programmed Array Logic (PAL) device 5, 167–168
prompt characters 60
PSTATUS subroutine 71
PWRITE subroutine 69

Q

Q3 signal 163
question mark (?) as prompt character 62

R

radio-frequency modulator 7
RAM
addressing 139, 169–172
allocation 76–81
auxiliary 86–88
space for peripheral cards 136
timing signals 172
RAMRD soft switch 88–90
RAM upgrade xxiii
RAMWRT soft switch 88–90
random number generator 59
RDALTCHAR soft switch 29
RDALTZP soft switch 84

RDBNK2 soft switch 84
RDCHAR subroutine 224
RDDHIRES soft switch 30
RD80COL soft switch 29
RD80STORE soft switch 29
RDHIRES soft switch 30
RDIOUDIS soft switch 30
RDKEY subroutine 47, 58, 59, 225, 269
RDLCRAM soft switch 84
RDMIXED soft switch 29
RDPAGE2 soft switch 29
RDTEXT soft switch 29
READ subroutine 40, 225
READ tape command 113–114
refreshing the display 170–171
registers 146, 161
  accumulator 138, 148
  A register 146
  examining and changing 110–111
  index 138
  X register 146
  Y register 146
relative addressing 121, 126, 137
reserved memory pages 77–81
Reset 11, 14, 228
reset routine 94–98
  and bank switches 83
  differences in Apple II family 230
reset vector 96–97
Return Monitor command 127
retype function 64
RF modulator 7
RGB-type monitor 185
Right Arrow 64
right bracket ( ]) as prompt character 62
rollover, N-key 10
ROM
  addressing 168–169
  expansion 133–135
  interpreter 5
  keyboard 5
  Monitor listings 307–347
  space for peripheral cards 133–135
  video 5
ROMEN1 signal 168–169
ROMEN2 signal 168–169
R/W80 signal 197

S

schematic diagram 201–204
SCRN subroutine 68, 225
SEARCH command 110
self-test 14, 98
  differences in Apple II family 230
SETCOL subroutine 68, 225
SETINV subroutine 225
SETNORM subroutine 225
Shift 11
Shift-key mod 41–42
short circuits 160
SI character 54
signals
  auxiliary slot 197–200
  expansion slot 191–197
  game I/O connector 190–191
  IOU 166–167
  keyboard connector 187–188
  keypad connector 188
  MMU 165
  PAL device 167–168
  RAM timing 172
  65C02 timing 162–163
  speaker connector 189
  video connector 186
  video timing 180–181, 184
signature byte 231
single-wire Shift-key mod xxiii
6502 microprocessor xx, 6
  differences from 65C02 6, 209–210
65C02 microprocessor xx, 6, 209–219
  data sheet 210–219
  differences from 6502 6, 209–210
  specifications 161–163
  timing 162–163
65C02 stack 78
slot, auxiliary 49–50
slot number, finding 137
slot 3 49–50, 149–150
  firmware 69
  in original Apple IIe 144
slots, expansion 7, 132–144
  signals 191–197
SLOTC3ROM soft switch 50, 143
SLOTCXROM soft switch 143
SO character 54
soft switches
  auxiliary memory 87, 89
  bank switches 82–86, 88
  differences in Apple II family 230
  display 28–31
  I/O memory 142–143
  implemented by IOU 166–167
  implemented by MMU 164
  speaker 39
Solid Apple (Apple) 11, 13, 228
SPC command xxi
speaker 4, 38–39, 189
  connector 189
  soft switch 39
specifications, environmental 158
stack
  auxiliary 153–154
  main 153–154
  65C02 78
stack pointers 78, 153
standard I/O links 51
  address storage 78
  changing 140–141
starting up 267–268
startup drives xx–xxi
stop-list feature 55
strobe bit 13
strobe output 41, 43
STSBYTE 285
SUB character 55
subroutines
  directory of 220–226
  output 64–68
  Pascal I/O protocol 68–71
  standard I/O 46–71
  See also names of subroutines
Super Serial Card 276–291
  command character 278
  commands 278–285
  error codes 285–286
  memory use 287–290
  scratchpad RAM 290–291
  terminal mode 286–287
switch 0 41, 43
switch 1 41, 43
switches *See* soft switches
switch inputs 41–42, 43
SYN character 54
System Monitor *See* Monitor, System

T

tabbing 271–272
TAB command xxi
  with original Apple IIe 271–272
television set 16
temperature
  case 159
  operating 158
text cards 86, 134, 150, 267–275
text character sets
  alternate 19–20
  primary 19–20, 228
text display 19–21, 22, 178–181
  flashing format 57–58
  inverse format 19, 57–58
  normal format 19
  See also 40-column text; 80-column text
text Page 1 27, 78
text Page 2 27, 79
TEXT soft switch 29
text window 56–57
  memory locations 57
timing signals
  expansion slots 194
  RAM 172
  65C02 microprocessor 162–163
  video 180–181, 184

U

US character 55
user's interrupt handler 154–155

V

vectors
  BRK 148
  interrupt 151
  IRQ 147–148
  page 3 97
  reset 96–97
VERIFY command 109, 118
VERIFY subroutine 226
vertical sync 231
VID7M signal 163
video counters 173–174
video display *See* display, video
video monitor 16–17
  connector 8, 186
video output signals 185–186
video ROM 5
video standards 173
VLINE subroutine 68, 226
voltage
  line 158
  supply 159
VTABZ subroutine 68
VT character 54

W

WAIT subroutine 226
warm-start reset 95
WRITE subroutine 39, 226
WRITE tape command 111–112

X

XFER subroutine 91, 93, 144, 153
X register 146

Y

Y register 146

Z

zero page 77, 79–81

THE APPLE PUBLISHING SYSTEM

This Apple manual was written, edited, and composed on a desktop publishing system using the Apple Macintosh™ Plus and Microsoft® Word. Proof and final pages were created on the Apple LaserWriter® Plus. POSTSCRIPT™, the LaserWriter's page-description language, was developed by Adobe Systems Incorporated.

Text type is ITC Garamond® (a downloadable font distributed by Adobe Systems). Display type is ITC Avant Garde Gothic®. Bullets are ITC Zapf Dingbats®. Program listings are set in Apple Courier, a monospaced font.

Tell Apple About Your .....

☐ Please contact your authorized Apple dealer when you have questions about your Apple products. Dealers are trained by Apple Computer and are given the resources to handle service and support for all Apple products. If you need the name of an authorized Apple dealer in your area, call toll-free: 800-538-9696.

☐ Would you like to tell Apple what you think about this product? After you have had an opportunity to use this product we would like to hear from you. You can help us to improve our products by responding to the questionnaire below and marking the appropriate boxes on the card at the right with a **#2 lead pencil**. If you have more than one response to a question, mark all the boxes that apply. Please detach the card and mail it to Apple. Include additional pages of comments if you wish.

1. How would you rate the *Apple IIe Technical Reference* overall? (**1**=poor. . .**6**=excellent)
2. Where did you buy this manual? (**1**=dealer, **2**=bookstore, **3**=other)
3. How much experience have you had with computers? (**1**=none. . .**6**=extensive)
4. If you program, which of the following best describes your programming? (**1**=a college class requirement, **2**=a job requirement, **3**=a hobby, **4**=a source of income, **5**=other)
5. If you program, which programming languages do you use? (**1**=BASIC, **2**=Pascal, **3**=C, **4**=assembly language, **5**=other)
6. Are you a Certified or Registered Developer? (**1**=Certified, **2**=Registered, **3**=both, **4**=neither)
7. How much of the *Apple IIe Technical Reference* have you read? (**1**=entire manual, **2**=whole chapters, **3**=specific areas of interest)
8. How easy was the manual to read and understand? (**1**=difficult. . .**6**=very easy)
9. How would you rate the organization of this manual? (**1**=poor. . .**6**=excellent)
10. How easy was it to find the information you needed? (**1**=difficult. . .**6**=very easy)
11. To what degree did the technical material in the manual meet your expectations? (**1**=low. . .**6**=high)
12. What did you like best about the manual?

13. What did you like least about the manual?

14. What section of the manual do you use most?

15. Please describe any errors or inconsistencies you may have encountered in this manual. (Page numbers would be helpful.)
16. What suggestions do you have for improving the *Apple IIe Technical Reference?*

Thanks for your time and effort.

030-1478-A

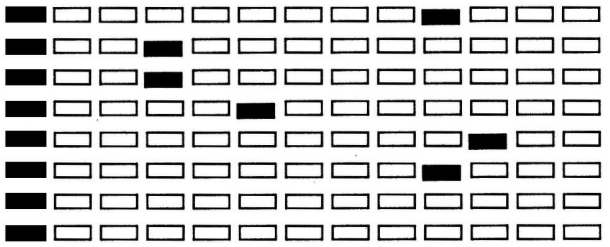

Please Do Not Mark Above This Line

1. 1 2 3 4 5 6

2. 1 2 3

3. 1 2 3 4 5 6

4. 1 2 3 4 5

5. 1 2 3 4 5

6. 1 2 3 4

7. 1 2 3

8. 1 2 3 4 5 6

9. 1 2 3 4 5 6

10. 1 2 3 4 5 6

11. 1 2 3 4 5 6

12. _____

_____

13. _____

_____

14. _____

_____

15. _____

_____

16. _____

_____

Return Address: _____

_____

_____

_____

Place
First Class
Postage
Here

Apple Computer, Inc.
P.O. Box 1143
Cupertino, CA 95014
USA

 A Ref pub



The Apple Technical Library

The Official Publications from Apple® Computer, Inc.

The Apple Technical Library offers programmers, developers, and enthusiasts the most complete technical information available on Apple computers, peripherals, and software. The Library consists of technical manuals for the Apple II family of computers, the Macintosh family of computers, key peripherals, and programming environments.

Apple Technical Library titles on the Apple II family include technical references to the Apple IIe, Apple IIc, and Apple IIGS computers, with detailed descriptions of the hardware, firmware, ProDOS operating system, and the built-in programming tools that programmers and developers can draw upon. In addition to a technical introduction and programmer's guide to the Apple IIGS, there are tutorials and references for Applesoft BASIC and Instant Pascal programmers.

The Inside Macintosh Library provides complete technical references to the Macintosh 512, Macintosh 512 enhanced, Macintosh Plus, Macintosh SE, and Macintosh II computers. Individual volumes provide technical introductions and programmer's guides to the Macintosh as well as detailed information on hardware, firmware, system software, and programming tools. The Inside Macintosh Library offers the most detailed and complete source of information available for the Macintosh family of computers.

In addition, titles in the Apple Technical Library offer references to the wide range of important printers, communications standards, and programming environments such as the Standard Apple Numerics Environment (SANE) to help programmers and experienced users get the most out their computer systems.

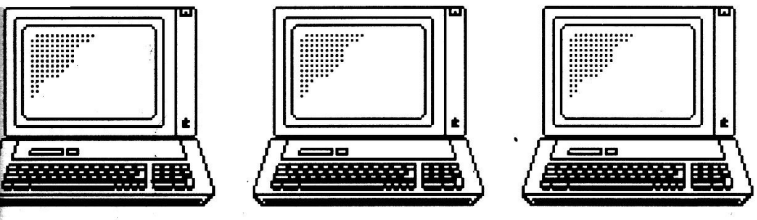



The Official Publication from Apple Computer, Inc.

Written and produced by the people at Apple Computer, this is the definitive, up-to-date reference manual for the Apple® IIe computer. It was written for professional programmers, designers of peripheral equipment, and advanced home users. The first printing of this manual described the internal operation of the original and enhanced Apple IIe computers. The manual has now been revised to cover the new 128K Apple IIe with extended keyboard.

The *Apple IIe Technical Reference Manual* provides detailed descriptions of all of the Apple IIe's hardware and firmware, including input/output features (such as Mousetext), memory organization, and the use of the monitor firmware. Appendixes offer complete reference information to the 6502 and 65C02 instruction sets and built-in I/O subroutines, a complete source listing of the monitor firmware, and more. Anyone who needs technical information on the internal workings of the original, the enhanced, or the extended-keyboard Apple IIe will find this book an indispensable guide to one of the world's most popular computers.

Apple Computer, Inc.
20525 Mariani Avenue
Cupertino, California 95014
(408) 996-1010
TLX 171-576

030-1194-B
Printed in U.S.A

Addison-Wesley Publ

ISBN 0-201-17750-1